DEPARTMENT OF COMMERCE

BUREAU OF STANDARDS

S. W. STRATTON ☙ DIRECTOR

Weights and Measures

❧

TENTH ANNUAL CONFERENCE

OF REPRESENTATIVES FROM VARIOUS STATES

HELD AT THE BUREAU OF STANDARDS

WASHINGTON, D. C., MAY 25, 26, 27, AND 28, 1915

WASHINGTON

GOVERNMENT PRINTING OFFICE

1916

MISC. PUBLICATION, NO. 15.

DEPARTMENT OF COMMERCE
BUREAU OF STANDARDS
S. W. STRATTON ❧ DIRECTOR

Weights and Measures

❧

TENTH ANNUAL CONFERENCE

OF REPRESENTATIVES FROM VARIOUS STATES
HELD AT THE BUREAU OF STANDARDS
WASHINGTON, D. C., MAY 25, 26, 27, AND 28, 1915

WASHINGTON
GOVERNMENT PRINTING OFFICE
1916

ADDITIONAL COPIES

OF THIS PUBLICATION MAY BE PROCURED FROM
THE SUPERINTENDENT OF DOCUMENTS
GOVERNMENT PRINTING OFFICE
WASHINGTON, D. C.
AT
50 CENTS PER COPY

▽

OFFICERS AND COMMITTEES.

OFFICERS.

President, Dr. S. W. Stratton, Director of the Bureau of Standards, Washington, D. C.
Vice President, William L. Waldron, State Superintendent of Weights and Measures, Trenton, N. J.
Secretary, L. A. Fischer, Chief, Division of Weights and Measures, Bureau of Standards, Washington, D. C.
Treasurer, John T. Willett, Chief State Inspector of Weights and Measures, South Bend, Ind.

COMMITTEES.

EXECUTIVE COMMITTEE.

Dr. S. W. Stratton.
L. A. Fischer.
John F. Farrell, State Superintendent of Weights and Measures, Albany, N. Y.
Thure Hanson, State Commissioner of Weights and Measures, Boston, Mass.
J. W. Richardson, State Superintendent of Weights and Measures, Richmond, Va.
Chas. G. Johnson, State Superintendent of Weights and Measures, Sacramento, Cal.
Burr B. Lincoln, Deputy State Dairy and Food Commissioner, In charge of Weights and Measures, Lansing, Mich.
Thos. F. Egan, State Superintendent of Weights and Measures, Hartford, Conn.
Fred C. Albrecht, Chief State Inspector of Weights and Measures, Columbus, Ohio.
Joseph Hartigan, Commissioner of Weights and Measures, New York, N. Y.
W. F. Cluett, Chief Deputy Inspector of Weights and Measures, Chicago, Ill.
E. W. Van Duyn, State Superintendent of Weights and Measures, Des Moines, Iowa.
James Sweeney, Chief of the State Bureau of Standards, Harrisburg, Pa.
I. M. Howell, State Superintendent of Weights and Measures, Olympia, Wash.

COMMITTEE ON TOLERANCES AND SPECIFICATIONS.

L. A. Fischer, Chief, Division of Weights and Measures, Bureau of Standards, Washington, D. C.
John C. Connors, ex-Sealer of Weights and Measures, Cambridge, Mass., Troy, N. Y.
Fred P. Downing, Chief State Inspector of Weights and Measures, Madison, Wis.

COMMITTEE ON CONSTITUTION AND BY-LAWS.

John H. Sherman, Superintendent of Weights, Measures, and Markets, District of Columbia.
W. F. Hand, State Chemist, Agricultural and Mechanical College, Agricultural College, Miss.
W. F. Cluett, Chief Deputy Inspector of Weights and Measures, Chicago, Ill.
Joseph Hartigan, Commissioner of Weights and Measures, New York, N. Y.
Charles G. Johnson, State Superintendent of Weights and Measures, Sacramento, Cal.

COMMITTEE OF REFERENCE.

E. F. STIMPSON, Deputy State Sealer of Weights and Measures, Lawrence, Kans.
WILLIAM F. CLUETT, Chief Deputy Inspector of Weights and Measures, Chicago, Ill.

COMMITTEE ON THE METRIC SYSTEM.

JOSEPH HARTIGAN, Commissioner of Weights and Measures, New York, N. Y.
THURE HANSON, State Commissioner of Weights and Measures Boston, Mass.
F. G. BUCHTEL, Deputy State Sealer of Weights and Measures, Salem, Oreg.
F. P. DOWNING, Chief State Inspector of Weights and Measures, Madison, Wis.

LIST OF PERSONS WHO ATTENDED THE CONFERENCE.

STATE DELEGATES.

California.—Charles G. Johnson, State Superintendent of Weights and Measures, Sacramento.

Connecticut.—Thomas F. Egan, State Superintendent of Weights and Measures, Hartford.
Charles A. Fine, Deputy State Superintendent of Weights and Measures, Hartford.
Walter F. Stiles, State Inspector of Weights and Measures, Hartford.

Dist. of Columbia.—John H. Sherman, Superintendent of Weights, Measures, and Markets, Washington.

Indiana.—John T. Willett, Chief State Inspector of Weights and Measures, South Bend.
John F. Sullivan, County Inspector of Weights and Measures, Crawfordsville.

Iowa.—E. W. Van Duyn, Chief State Inspector of Weights and Measures, Des Moines.

Massachusetts.—Thure Hanson, State Commissioner of Weights and Measures, Boston.

Michigan.—B. B. Lincoln, Deputy State Superintendent of Weights and Measures, Lansing.

Mississippi.—W. F. Hand, State Chemist, Agricultural College.

New Jersey.—W. L. Waldron, State Superintendent of Weights and Measures, Trenton.

New York.—John F. Farrell, State Superintendent of Weights and Measures, Albany.
James J. O'Hara, Deputy State Superintendent of Weights and Measures, Corning.
F. Reichmann, Special Representative, New York City.

North Carolina.—Thomas F. Brockwell, State Standard Keeper, Raleigh.

New Hampshire.—James F. Brennan, Special Representative, Peterborough.

Ohio.—F. C. Albrecht, Chief State Inspector of Weights and Measures, Columbus.

Pennsylvania.—James Sweeney, Chief, State Bureau of Standards, Harrisburg.

Philippine Islands.—James J. Rafferty, Collector of Internal Revenue, Manila.

Rhode Island.—William F. Goodwin, State Sealer of Weights and Measures, Saylesville.

Virginia.—John W. Richardson, State Superintendent of Weights and Measures, Richmond.

Washington.—I. M. Howell, State Superintendent of Weights and Measures, Olympia.

West Virginia.—J. H. Nightingale, State Commissioner of Weights and Measures, Charleston.
C. W. Waggoner, Assistant State Commissioner of Weights and Measures, Morgantown.
Oliver A. Ashburn, Special Representative, West Union.
B. H. Hite, Special Representative, Morgantown.
L. E. Hook, County Sealer of Weights and Measures, Charleston.

Wisconsin.—F. P. Downing, Chief State Inspector of Weights and Measures, Madison.

CITY AND COUNTY DELEGATES.

Connecticut—New Haven: Ed. J. Maroney, Sealer of Weights and Measures.
Stamford: John F. Britton, Sealer of Weights and Measures.

Dist. of Columbia—George A. Howe, Assistant Superintendent of Weights, Measures, and Markets.
Leo S. Schoenthal, Assistant Superintendent of Weights, Measures, and Markets.

Illinois—Chicago: W. F. Cluett, Chief Deputy Inspector of Weights and Measures.

Indiana—Indianapolis: H. F. Adam, Inspector of Weights and Measures.
Lake County: J. A. Umpleby, Inspector of Weights and Measures, Crown Point.

Massachusetts—Beverly: Robert J. Rafferty, Sealer of Weights and Measures.
Gardner: C. W. Shippee, Sealer of Weights and Measures.
Holyoke: J. D. Goddu, Sealer of Weights and Measures.
Lowell: Warren P. Riordan, Sealer of Weights and Measures.
Pittsfield: John F. O'Kane, Sealer of Weights and Measures.
Salem: G. L. Day, Sealer of Weights and Measures.
Somerville: J. H. Dusseault, Sealer of Weights and Measures.

Michigan—Battle Creek: F. G. Barnard, Sealer of Weights and Measures.
Detroit: George F. Austin, Sealer of Weights and Measures.

Missouri—St. Louis: James W. Griffin, Commissioner of Weights and Measures.

Maryland—Washington County: S. D. Frownfelter, Sealer of Weights and Measures.

New Jersey—Bayonne: H. Mainhard, Superintendent of Weights and Measures.
Bergen County: Jesse DeGroff, Superintendent of Weights and Measures, Hackensack.
Camden County: George E. Starn, Superintendent of Weights and Measures, Camden.
Elizabeth: W. J. Bender, Superintendent of Weights and Measures.
Englewood: J. E. Fitzgerald, Superintendent of Weights and Measures.
Hudson County: Thomas J. Waldron, Superintendent of Weights and Measures, Jersey City.
Jersey City: J. S. Burke, Superintendent of Weights and Measures.
Kearney: J. D. Castles, Superintendent of Weights and Measures.
Morris County: H. S. Worman, Superintendent of Weights and Measures, Boonton.
Union County: Isaac Seeley, Superintendent of Weights and Measures, Elizabeth.

New York—Buffalo: Charles J. Quinn, Sealer of Weights and Measures.
Canandaigua and Ontario Counties: H. J. Moore, Sealer of Weights and Measures, Canandaigua.
Greene County: A. E. Ballou, Sealer of Weights and Measures, Catskill.
New York: Joseph Hartigan, Commissioner of Weights and Measures.
Fred H. Tighe, Deputy Commissioner of Weights and Measures.
Mrs. Katherine Haenlein, Confidential Representative.

New York—Oswego County: Frank H. French, Sealer of Weights and Measures, Fulton.
Washington County: S. T. Downs, Sealer of Weights and Measures, Hampton.
Ohio—Columbiana County: W. H. Barr, Sealer of Weights and Measures, Columbiana.
Cleveland: W. Q. Radcliffe, Commissioner of Weights and Measures.
Franklin County: W. W. Lanning, Sealer of Weights and Measures, Grove City.
Madison County: L. J. Leonard, Sealer of Weights and Measures, London.
Pennsylvania—Allentown: B. Frank Rinn, Inspector of Weights and Weights and Measures, Pittsburgh.
Allegheny County: J. B. Hershey, Chief Inspector of Measures.
Cambria County: Thomas Powell, Sealer of Weights and Measures, Patton.
Chester: Robert Watson, Sealer of Weights and Measures.
Delaware County: O. N. Smith, Inspector of Weights and Measures, Darby.
Fayette County: J. D. Bennett, Inspector of Weights and Measures, Uniontown.
Frankiln County: F. A. Foreman, Inspector of Weights and Measures, Chambersburg.
Harrisburg: H. D. Reel, Inspector of Weights and Measures.
Johnstown: H. E. Mitchell, Sealer of Weights and Measures.
Lancaster, City and County: John A. Leinbach, Sealer of Weights and Measures.
Lehigh County: Harry E. Biery, Sealer of Weights and Measures, Allentown.
Luzerne County: J. F. McGroarty, Inspector of Weights and Measures, Wilkes-Barre.
Martin Murray, Inspector of Weights and Measures, Wilkes-Barre.
Northampton: John A. Person, Sealer of Weights and Measures, Williamsport.
Northumberland County: W. F. McGovern, Inspector of Weights and Measures, Mount Carmel.
Philadelphia: Benjamin M. Sharp, Chief Clerk, Bureau of Weights and Measures.
John Umstead, Chief Inspector of Weights and Measures.
Wilkes-Barre: F. N. Roll, Sealer of Weights and Measures.
York: Charles F. Borgel, Inspector of Weights and Measures.
Tennessee—Nashville: James R. Smith, Sealer of Weights and Measures.
Virginia—Alexandria County: George F. Dennis, Sealer of Weights and Measures, South Washington.
Petersburg: A. S. Johnson, Sealer of Weights and Measures.
Prince William County: Charles Farquhar, Sealer of Weights and Measures, Manassas.
Richmond: T. W. Joseph, Inspector of Weights and Measures.
West Virginia—Parkersburg: B. F. Nern, Inspector of Weights and Measures.
Wheeling: W. H. Smith, Commissioner of Weights and Measures.
Wisconsin—Beloit: W. M. Van Lone, Sealer of Weights and Measures.
Milwaukee: W. F. Steinel, Deputy Sealer of Weights and Measures.

VISITORS.

CHAS. F. ANDERSON—Post Office Department, Washington, D. C.
J. B. ANDERSON—Scale Inspector, Kansas City Southern Railway, Mena, Ark.
H. S. BAILEY—Food Investigation Chemist, Bureau of Chemistry, Washington, D. C.
W. J. BARNES—Special Representative Detroit Automatic Scale Co., Detroit, Mich.
F. M. BASLER—Assistant Scale Inspector, Pennsylvania Railroad, Altoona, Pa.
F. J. BOURGER—Superintendent of Bridges and Buildings, New Orleans Great Northern Railway, New Orleans, La.
A. BOUSFIELD—Chief Engineer, E. & T. Fairbanks & Co., St. Johnsbury, Vt.
MILLARD F. BOWEN—1739 F Street, Washington, D. C.
R. F. CHATILLON—John Chatillon & Sons, New York, N. Y.
F. F. CLAPP—Weigher, Chamber of Commerce, Milwaukee, Wis.
NEWTON I. COLF—Superintendent Scales, Stimpson Scale & Electric Co., Northville, Mich.
J. M. CONNOR—District Manager American Kron Scale Co., 632 Chestnut Street, Philadelphia, Pa.
J. C. CONNORS—W. & L. E. Gurley, Troy, N. Y.
J. F. CRUIKSHANK—Superintendent Scales, Southern Railway, Washington, D. C.
W. FRANK DAUB—The Howe Scale Co., 341 Broadway, New York, N. Y.
L. D. DAVIS—Supervisor of Scales and Weighing, Baltimore & Ohio Railroad, Baltimore, Md.
JOHN DOWER—Supervisor of Weights, Merchants Exchange, St. Louis, Mo.
J. W. DUGAN—Chief of Weighing Bureau, St. Louis & San Francisco Railroad, Springfield, Mo.
A. NEAL DUGGER—Chief Scale Inspector, Tennessee Coal & Iron Railway Co., Ensley, Ala.
G. M. ECKER—Scale Inspector, Central Railroad Co. of New Jersey, Mauch Chunk, Pa.
W. C. EDWARDS—Charles Forschner & Sons, New Britain, Conn.
F. S. ELLIOTT—Scale Inspector, Missouri Pacific Railway, 4537 San Francisco Avenue, St. Louis, Mo.
A. W. EPRIGHT—Scale Inspector, Pennsylvania Railroad, Altoona, Pa.
FRED W. GAST—Engineer of Scales, Treasury Department, Washington, D. C.
T. H. GATLIN—Assistant Chief Engineer, Southern Railway, Washington, D. C.
B. B. GORDON—Scale Inspector, Pennsylvania Lines West, 1530 Broadway, Logansport, Ind.
C. H. GRAFF—Bennington Scale Co., Evans Building, Washington, D. C.
A. H. HAFNER—Representative M. E. Office, Pennsylvania Railroad, Altoona, Pa.
WILLIAM HARDY—Erector, Winters-Coleman Scale Co., 182 Hamilton Avenue, Clifton, N. J.
H. H. HARMAN—Engineer Bridges, Bessemer & Lake Erie Railroad, Greenville, Pa.
H. L. HARRIS—Pacific Coast Borax Co., 100 William Street, New York, N. Y.
NATHAN HAUSE—Manager, Baltimore Branch Standard Scale & Supply Co., 409–411 North Gay Street, Baltimore, Md.
JOHN T. HEARD—Scale Inspector, Louisville & Nashville Railroad, Birmingham, Ala.
H. O. HEM—Chief Engineer, Strait Scale Co., Kansas City, Mo.
M. W. HECKMAN—Gilbert & Barker Manufacturing Co., 26 Broadway, New York, N. Y.
H. B. HOUSTON—Assistant Scale Inspector, Pennsylvania Railroad, Altoona, Pa.
JOS. HOPKINSON—Superintendent, The Computing Scale Co., Dayton, Ohio.
C. A. JACKSON—President, A. S. M. A., Delaware & Hudson Co., Rutland, Vt.
G. R. JOHNSON—Virginia-Carolina Chemical Co., 610 Washington Street, Petersburg, Va.
D. H. KELLY—Assistant Secretary, Toledo Scale Co., Toledo, Ohio.
T. G. KENWORTHY—Scale Inspector, Wabash Railroad, Peru, Ind.

C. J. LaForge.....Manager Scale Department, The Fairbanks Co., 416 Broome Street, New York, N. Y.
F. N. Lohmann.....Chicago, Burlington & Quincy Railroad, Aurora, Ill.
John R. Loosen.....Weighing Supervisor, Wells Fargo & Co., 817 South Fifth Avenue, Chicago, Ill.
M. F. McCann.....Agent, Western Weighing and Inspection Bureau, South Chicago, Ill.
H. G. Mack.....Pennsylvania Railroad, 199 Weber Road, Columbus, Ohio.
A. Malmstrom.....Chief Scale Inspector, Atchinson, Topeka & Santa Fe Railway, 231 Branner Street, Topeka, Kans.
C. G. Michalis.....Torsion Balance Co., 92 Reade Street, New York, N. Y.
Wm. N. Nicholson.....Assistant Manager, Whitall-Tatum Co., Millville, N. J.
Ernest Ohnell.....Vice President, American Kron Scale Co., 430 East Fifty-third Street, New York, N. Y.
J. W. H. O'Meara.....Supervisor Weighing, Chesapeake & Ohio Railway, Richmond, Va.
Daniel C. Palmer.....Standard Computing Scale Co., 24 Claflin Road, Brookline, Mass.
C. A. Persun.....Assistant Scale Inspector, Pennsylvania Railroad, Altoona, Pa.
C. Pettis.....General Scale Inspector, New York Central, Rochester, N. Y.
J. L. Pherigo.....Scale Inspector, Queen & Crescent, Chattanooga, Tenn.
H. F. Reckendorf.....Secretary-Treasurer, Streeter-Amet Weighing & Recording Co., Chicago, Ill.
Mat Ribble.....Standard Computing Scale Co., Detroit, Mich.
M. D. Richardson.....Scale Inspector, Wabash Railroad, Decatur, Ill.
W. E. Rhodes.....Scale Inspector, Buffalo, Rochester & Pittsburgh Railway, Dubois, Pa.
Wm. M. Roylance.....Treasurer, Western Fruit Jobbers' Association, Provo, Utah.
George Scheetz.....Scale Inspector, Philadelphia & Reading Railway Co., Reading, Pa.
J. A. Schmitz.....Assistant Weighmaster, Chicago Board of Trade, 90 Board of Trade Building, Chicago, Ill.
J. G. Sims.....Sales Manager, Angldile Computing Scale Co., Elkhart, Ind.
C. A. Slater.....Strait Scale Co., Washington, D. C.
C. G. Stoody.....Chief Scale Inspector, Chicago, Rock Island & Pacific Railway, room 323, La Salle Station, Chicago, Ill.
H. A. Tate.....Chief Scale Inspector, Norfolk & Western Railway, Roanoke, Va.
S. M. Templeton.....District Sales Manager, Dayton Moneyweight Scale Co., 1313 Arch Street, Philadelphia, Pa.
John L. Theobald.....Eastern Representative, Toledo Scale Co., 1358 Broadway, New York, N. Y.
A. Christopher.....Nashville, Chattanooga & St. Louis Railway, Nashville, Tenn.
J. L. Troemner.....Henry Troemner, 911 Arch Street, Philadelphia, Pa.
T. B. Turnbull.....Superintendent Bridges and Buildings, Ann Arbor Railroad, Owosso, Mich.
William Ward.....Assistant Scale Inspector, Pennsylvania Railroad, Altoona, Pa.
G. I. Waterhouse.....Norfolk & Western Railway Co., Roanoke, Va.
A. C. Welch.....Scale Inspector, Toledo & Ohio Central Railroad, 1127 Highland Street, Columbus, Ohio.
W. E. Wells.....Chief Scale Inspector, Chicago, Burlington & Quincy Railroad, 547 West Jackson Boulevard, Chicago, Ill.
Robert C. Welsh.....Assistant Scale Inspector, Pennsylvania Railroad, Harrisburg, Pa.
H. C. Warrall.....Gilbert & Barker Manufacturing Co., Springfield, Mass.
A. G. Zeibel.....Scale Supervisor, Chicago Great Western Railroad, Oelwein, Iowa.

CONTENTS.

FIRST SESSION (MORNING OF TUESDAY, MAY 25, 1915).

Page.

Address of welcome by Hon. William C. Redfield, Secretary of Commerce..... 13
Address by the president, Dr. S. W. Stratton..... 17
Appointment of acting secretary..... 19
Reports of State delegates:
Arizona, O. N. Creswell..... 19
California, Charles G. Johnson..... 20
Connecticut, Thomas F. Egan..... 20
District of Columbia, John H. Sherman..... 22
Idaho, John K. White..... 23
Indiana, John T. Willett..... 23
Kansas, Edwin F. Stimpson..... 24
Massachusetts, Thure Hanson..... 25
Michigan, Burr B. Lincoln..... 26
Minnesota, Charles C. Neale..... 27
New Hampshire, Maj. James F. Brennan..... 28
New Jersey, William L. Waldron..... 29
New York, John F. Farrell..... 31
Ohio, Fred. C. Albrecht..... 32
Oklahoma, W. P. Haseman..... 33
Oregon, Fred G. Buchtel..... 34
Pennsylvania, James Sweeney..... 35
Rhode Island, William F. Goodwin..... 36
South Carolina, E. J. Watson..... 37
Utah, Heber C. Smith..... 37
Vermont, H. H. Henry..... 39
Virginia, John W. Richardson..... 40
Washington, I. M. Howell..... 40
West Virginia, J. H. Nightingale..... 41
Wisconsin, Fred P. Downing..... 42
Reports submitted by city delegates:
Chicago, Ill., William F. Cluett..... 43
Indianapolis, Ind., Herman F. Adam..... 45
Report of the secretary, L. A. Fischer..... 46

SECOND SESSION (AFTERNOON OF TUESDAY, MAY 25, 1915).

Remarks by James J. Rafferty, collector of internal revenue for the Philippine Islands..... 50
Testing of electric meters, by H. B. Brooks, Bureau of Standards..... 52
Discussion of above paper..... 56
Report of committee on constitution and by-laws and discussion thereon..... 58

THIRD SESSION (MORNING OF WEDNESDAY, MAY 26, 1915).

Report of railroad track scale tests conducted by the Bureau of Standards, by C. A. Briggs..... 82
A method of adjusting railroad track scales, by H. L. Van Keuren, Bureau of Standards..... 86
Automatic scales, by F. J. Schlink, Bureau of Standards..... 95
Discussion of above paper..... 108
Remarks by William M. Roylance, representative of Western Fruit Jobbers Association of America..... 109
Report of committee on constitution and by-laws and discussion thereon (continued)..... 110

FOURTH SESSION (MORNING OF THURSDAY, MAY 27, 1915).

Page.
Reconsideration of report of committee on constitution and by-laws..... 115
Weights and measures work from the standpoint of the efficiency engineer, by John H. Sherman, superintendent of weights, measures, and markets, District of Columbia..... 122
Resolution for appointment of committee to investigate elevator hopper and grain scales, and discussion thereon..... 133
Resolution in opposition to fee system of inspection..... 134

FIFTH SESSION (AFTERNOON OF THURSDAY, MAY 27, 1915).

Appointment of committees..... 135
Remarks by Mrs. Haenlein, confidential representative, Mayor's Bureau of Weights and Measures, New York, N. Y..... 136
Resolution extending vote of thanks to Mr. Sherman..... 136
Report of committee on tolerances and specifications..... 137
Discussion of above report..... 138
Resolution to enlarge and increase power of tolerance committee..... 143
Reading of manufacturers' comments and objections to report, and discussion thereon..... 151
Secretary's note, as to disposition of remainder of comments and objections..... 158

SIXTH SESSION (MORNING OF FRIDAY, MAY 28, 1915).

Discussion of Ashbrook Bill, including text of bill..... 159
System of keeping records, by Benjamin M. Sharp, chief clerk, Weights and Measures Bureau, Philadelphia, Pa..... 171
The standard barrel law, by F. S. Holbrook, Bureau of Standards..... 176
Report of committee on resolutions:
Resolution recommending uniformity of legislation and of tolerances and specifications..... 186
Resolution for holding next conference in New York, N. Y..... 186
Resolution for establishing a national board of examiners..... 187
Several resolutions for inviting scale experts and manufacturers to give papers at the next conference..... 187
Resolution extending vote of thanks to the Director and members of the Bureau of Standards..... 188
Resolution extending vote of thanks to official stenographer..... 189
Resolution favoring sale of dry commodities by weight..... 189
Legislation: Addition of section to model law requiring sale of dry commodities by weight, etc..... 189
Report of committee on nominations..... 190
Election of officers..... 190
Report of entertainment committee..... 191

APPENDIXES.

Appendix 1.—Tolerances and specifications for weights and measures and weighing and measuring devices..... 193
Appendix 2.—Continuation of comments and objections of manufacturers to advance report of committee on tolerances and specifications, and committee's statements in relation thereto..... 220
Appendix 3.—Model State law on the subject of weights and measures, drafted by the Bureau of Standards and indorsed by the Eighth Annual Conference on Weights and Measures, as amended by the tenth conference..... 235

REPORT OF THE TENTH ANNUAL CONFERENCE ON WEIGHTS AND MEASURES OF THE UNITED STATES.

HELD AT THE BUREAU OF STANDARDS, WASHINGTON, D. C., MAY 25 TO 28, 1915.

FIRST SESSION (MORNING OF TUESDAY, MAY 25, 1915).

The conference was called to order at 10 o'clock a. m. by the chairman, Dr. S. W. Stratton, Director of the Bureau of Standards.

The CHAIRMAN. Gentlemen of the conference, it gives me very great pleasure to again welcome you to this, which has proven to be the most important conference of the year at the Bureau of Standards, and we have a great many of them, some 20 or 30 each year.

This, as the older members know, is the tenth conference held at the Bureau of Standards, and we have looked forward to this meeting. Those of you who were here last year remember the words of encouragement that were spoken to us by the Secretary of Commerce. During the year the Secretary has given a great deal of attention to all of the bureaus of the department, and especially to the Bureau of Standards, all with the idea of making the bureaus useful to the country. We are fortunate, indeed, in having a Secretary who goes so minutely into the details of the work of the bureaus and studies the methods by which they may be made useful. The Secretary is again with us this morning, and it gives me great pleasure to have him address you.

ADDRESS OF WELCOME BY HONORABLE WILLIAM C. REDFIELD, SECRETARY OF COMMERCE.

Gentlemen of the conference, I sometimes wonder when we hear the formal words of welcome if we do not, as a matter of course, think that they are part of the day's work, a thing of form rather than of substance, a sort of preliminary to the real job of the day. I think we all commonly feel, when we are members of conferences, conventions, and meetings of the kind, that somebody has to say a polite word, a "let us in," so to speak, as pleasantly as may be.

If that is true, I desire that you shall start your discussions here under the most pleasant circumstances, and mere politeness would, I hope, carry me far enough to say that you are welcome. If I speak the whole truth, perhaps I ought to add that you should give us credit for the unusual influence we have exerted with the Agricultural Department to have the weather arranged properly for you this morning. Little things like that, however, are a portion

of the work of the bureau, which are not as yet published accurately. We hope in time to arrange the weather service so that it will operate entirely satisfactory to all of our friends who come here.

What I would like for you to get from me, if I have the power to make it clear to-day, is that of a welcome which is always at work. I have not much use for the kind of welcome which says, "Gentlemen, come in; this is a perfect morning, and we are glad to see you; I hope you will have a fine time;" and then the speaker goes home and forgets you for the rest of the year. That principle would not run a factory, for it would shut down as soon as the fellow's back was turned that said that sort of thing. If I say to my superintendent, "John, you are doing well; that was a fine job," I have done pretty well, so far, and I have pleased John; but if from that time on I forget John and give him no help or encouragement through the year and take no interest in John's work and do not assist John to get the obstacles out of his way, then, after all, it is merely language and not practical service.

This bureau here and our whole department has no excuse for existence if it does not work all the year round, and it has no justification for existence if it does not do good work all the year round. If we are here to hold down jobs, get our names in the papers, and make something of a noise in the world, and do nothing else, then we are frankly not worth while at all. Therefore, if there is one thing we ought to do and which, with the knowledge we have, we try to do, it is that of keeping at work both while you are here and while you are away from here on the job to make this service something of use to the people, not merely to occupy a group of pleasant buildings in delightful surroundings, but to be of some real service in the world.

Over the gate of the infernal regions you will remember the old Italian poet put the sign, "Abandon hope, all ye who enter here," and with a certain amount of justification, I imagine, from what followed in his poem.

We should like to have the opposite result here. We would like to have it happen, for example, that the fellow who finds fault with us—they do; there are some so misguided that they do occasionally find fault—would find us so treating that opportunity as to make a friend.

I remember a business man, one of the best I ever knew, who said that he cared more for the complaints that came into the shop than anything else, because every complaint was an opportunity, and I think he conducted a very successful business, largely upon the foundation of the complaints that started; he took occasion to make every complaint a practical means of dealing personally with the complainer in such wise that the complainer became the friend.

I remember very distinctly of an opportunity once taken by a great commercial house that had a bad fire. The company had in its custody many thousands of dollars worth of goods in storage belonging to all kinds of people, and every one of those people was at once in a good deal of difficulty, because their things were more or less destroyed. Instead of dealing with that opportunity in such a way as to make these people unhappy, this concern saw in this disaster an opportunity, and they used it in such wise that when they got through dealing with all these people, myself among them, we

all felt that there was no concern in this whole country that we would so willingly deal with thereafter, because they showed their appreciation of our needs and of our difficulties and of our troubles. Putting themselves, with great skill, apparently, in the background, they dealt with the matter as they thought we would like to have them deal, and when I went in to present my claim for damages for the goods which I had myself lost I remember very well I was perfectly amazed to be in substance told, "Why, Mr. Redfield, you have not sufficiently looked after your own interests in this matter. Our judgment is that your claim should be enlarged, and if you are quite willing we will give you a check now, to-day." I went out with a sense of dealing with men who thought of me and of my interests and of my care; and that was clearly business advertising, which was worth all it cost.

I believe our spirit is to deal with problems that trouble men and trouble industry and trouble men of affairs all over this country, with a desire to work the difficulties out in order to be helpful. I have called this place on one occasion, and I like the title, "The House of Accuracy." I should like to add to that now another title, and call it "The House of Helpfulness," for we have no other excuse for being here unless it is to make the path more straight, to take the difficulties out of the road, to deal with the things that worry and make others worry less, and to contribute to the building up of the work that is so necessary, through you, for the people of this country.

I often think of the particular work with which you gentlemen are charged, as sifting down, more than most work in support of the men and women who have nobody else to help them and who are not able to help themselves. I suppose, gentlemen, that the science of weights and measures finds its worst abuse, in so far as it is abused, in the small dealings with the very poor. I presume it is true in this country, as in others, that the people who own the least and need the most, suffer in their need for the lack of the knowledge which, through you, should be supplied to them and given to them in protection of their need.

I have known it to be true that in the city where I lived, the people who were the least able to afford paid most per unit for what they had to get, and those who had the least opportunity to detect a fraud were often the most continuous victims of that kind of fraud which it is your business and ours, in such measure as we can, to find and to expose.

Therefore, I think, as I have said to you before, and I feel it very deeply now, there is a social value to your work which is of a very peculiar character and weight. I like to think of this institution as reaching out into the unknown, into those portions of nature which are as yet an undiscovered country, as reaching out into that which is as yet unknown and finding it out and learning how to handle and to deal with it, and translating it into usefuless for those who have neither the power nor the means nor the opportunity to do anything of that kind for themselves.

Now, I am going to leave the question of your work and of this institution for a few moments this morning, and I want to talk to you now—because I think it is a good opportunity to meet the citizens of many States and of many cities—a little bit on those affairs which interest us all as American citizens.

Nearly half of the world is on fire. The citizens of Europe, of Africa, of Asia, and of Australia are engaged in destruction. I wonder if you have ever thought, as I used to think, that now is a very ordinary time in which to live, that all the interesting things happened in the time about which the books were written, and that this was a very humdrum day. We, none of us, think so now, for America is the only continent in which a great many people are not trying to destroy one another. Neither your fathers nor yourselves ever saw such a condition as we face every time we pick up our morning newspaper. Men's lives, men's property are being destroyed at a rate which is appalling. Sciences are being utilized to produce disaster on a scale which we have never known. Nothing could be more contrasted than the spirit in which we meet here to help one another and the spirit with which, across the sea, men are trying to destroy one another. There can be no sharper difference made between the spirit of America and the spirit of militancy than that.

Now, of course, when so great a fire is burning we feel some of the heat, and there have been those who have been unwilling to play because they felt the heat, not realizing the spirit of thankfulness that should be theirs because they themselves were not being consumed by the fire. Please God, we shall keep out of that fire and we shall keep out of it not because we are afraid, but because if there is one thing in the Nation greater, perhaps, than anything else it is the power of self-control; and we do not purpose to lose our grip upon ourselves. So that, no matter what the event shall be—and I am not in the back of my mind even thinking or intimating for myself that there is to be any event other than a happy one—whatever the event shall be, you and I have faced in the last two or three weeks something that should make us very proud of our country. We have seen things happen that were, to say the least, hard to bear, and we have seen this wonderful people of ours, composed of men living in different climates and under different conditions, we have seen them calm and steady at a time when they were also most concerned, in a way that has been a splendid exhibition of power.

I think you will agree with me that the strength of America, the power of her manhood and conscience, has never been more finely exhibited than in its unanimous feeling and in its equally unanimous restraint of the last two or three weeks. I am sure you will be glad to tell your sons that you and I belong to a people strong enough to hold itself down and to be patient and firm and wholly unafraid.

Now, I want to pass for a moment to another phase of our situation. When you met here a year ago this Nation of ours was a debtor people; we owed Europe five thousand millions or more which it had loaned us to build our railways, to construct our utilities, and for manifold other uses. We owed her, also, when you last met here, four or five hundred millions or more of floating debt, and both of those things were in such condition that we could be called upon to pay. In August, when the storm broke, we were asked to pay, and gentlemen came hither for the purpose of making it possible for us to make the payments, and for some weeks there was that same kind of distress in our national affairs which would come to any man who was suddenly and immediately, in time of difficulty, called upon at once to pay all that he owed. It is almost an incredible situation that faces us to-day, as we look back at August of last year.

Yesterday I had to prepare for publication to-day the facts concerning the position of the United States in the international world with relation to the international markets, and found that it was almost impossible for me to get my figures in my estimates as large as the facts proved to be as regards our favorable position in the world. I had said to myself that I thought we would have a favorable balance in our international market for the 10 months ending May 1 of $800,000,000. In the back of my head I thought it might be $805,000,000, but I kept a little matter like five millions to the good. As a matter of fact, it is $850,000,000.

If we add what has occurred in May up to last Saturday night, the favorable balance of our merchandise transactions with other nations is now in excess of $900,000,000. If the rate of growth stays where it is and grows no more, and even falls off somewhat, we shall, at the close of the fiscal year on June 30, be in the unique position of having sold to others more than we have bought of them to the extent of a thousand millions of dollars, and that despite the fact that for the first two months of the year—July and August—the balance was adverse, so that we had to make that up in order to start. We have never, any of us, gentlemen, known anything like that before—never. The country of which we are citizens is necessary to the world as she has never been before. It is a very proud position to hold to-day—that of an American citizen—and it is proud not only by reason of our financial power, never so great as now, but also because we, conscious of our power, know the duty and the obligation of being calm and wise in the use of that power. So that there flows out from America to-day what I am most anxious should go out from this institution and this department—a spirit to the world of helpfulness, not because we are not able to struggle, if that be necessary, but because we think the finest use of power and of knowledge is to lift men up rather than to drag them down.

ADDRESS BY THE PRESIDENT, DR. S. W. STRATTON, DIRECTOR OF THE BUREAU OF STANDARDS.

As the Secretary has said, mere formal welcomes do not amount to much and, furthermore, we trust that most of you gentlemen are so much at home in the Bureau of Standards by this time that you do not need any formal welcome. You are always welcome, not only at this conference, but at all times of the year, either personally or through the mails. I will not take up much of your time, as the greater number of you have been here before, but for the benefit of the new members with us I will say just a word or two with regard to the object of our conference.

In the early days of the bureau, we recognized that the bureau could not reach the people in the affairs of ordinary weights and measures without a perfected machinery. Its usefulness to the public would be very greatly impaired without a stable organization in every State and in every community to bring about correct weights and measures and, when I say correct weights and measures, I mean that it is just as important to assist the man who wants to do right as it is to watch the man who wants to do wrong.

I am very glad to notice as this work develops, both in the conference and at the bureau, that there is a growing tendency on the part of the sealers throughout the country, both State and municipal, to consider something more than the mere police duties before them, to educate the public as it were, not only the dealers, but the public themselves, and to place the means before them for having correct weights and measures, and to educate them in matters along similar lines. The time is not far distant, as I have often said, when your work will be greatly enlarged, when you will be called upon to answer questions and to take up matters considered entirely outside of your functions at present.

Already the people throughout the country are beginning to give just as much attention to the weights and measures of public utilities as they are the weights and measures of your work. During the year the bureau has noted a decided improvement, a decided awakening of the weights and measures interest in all lines, not only in the smaller weights and measures used in commerce, but in the larger track scales, in the weights and measures used by the departments of the Government, and in the whole subject of weights and measures in its broadest aspect. Manufacturers are beginning to consider the manufacture of weights and measures from a scientific standpoint and the bureau can be and is exceedingly helpful to them in that matter.

The main object of this bureau in calling these meetings was to bring all of the people interested in these matters together, in order that the bureau might be a clearing house, as it were, for weights and measures matters. The official from one State who has had a lot of experience, who has found out by experience that some things were good and that other things were bad, can give us the benefit of the experiences at these meetings and the newer official from a State which has recently organized its weights and measures matters, can have the benefit of that experience.

Untold good has already come from these meetings and much more is to follow along that very line. There are many questions to be discussed about which we may differ. It would be somewhat unusual if a class of practical men should get together and not, from the standpoint of their own experience, in different localities, draw different conclusions but, as with weights and measures themselves, we must have a certain uniformity in regard to practices and we can best obtain this uniformity by the bringing together of the people interested, and some of us will have to give and others will have to take. However, throughout all the conference and throughout all the discussions, let us keep in mind that our object is to get at the truth, to eliminate all forms of politics, and to get at those facts which will help every man to do his work better.

We enjoyed very much in the first years of the conference hearing the delegates from the different States give us their experiences, and give us a résumé of the conditions. We have had to curtail that feature to some extent in the last few years. However, it was thought best this year, in order that we might get acquainted with the delegates and to know who are here, to have just a brief statement from each official State delegate.

APPOINTMENT OF ACTING SECRETARY.

The CHAIRMAN. As you perhaps know, the secretary of the conference, Mr. Fischer, is in San Francisco, serving as a member of the jury of awards of the exposition, and in his absence I have asked Mr. Holbrook to act as secretary, because he is acquainted with the work and will be in close touch with Mr. Fischer upon his return.

REPORTS OF STATE DELEGATES.[1]

ARIZONA.

By O. N. CRESWELL, *State Inspector of Weights and Measures.*

Mr. President and gentlemen, no funds were available with which to meet the expense of a trip to Washington; for this reason the State of Arizona is not represented on the floor of this conference.

The original weights and measures law of this State became effective August 16, 1912. Since that date several amendments have been made to the law, the most important of which are to require regular inspections to be made in all precincts, town, or cities with a population of not over 5,000 and not under 900 inhabitants, and to have inspections made in any place in the State when a request is made so to do. In addition to the increased jurisdiction, the commodity sections of the law were enlarged so that the net weight and measure must be marked on all necessary articles offered for sale.

The weights and measures officials of this State consist of the State inspector and six city sealers. Each city with a population of over 5,000 inhabitants has a city sealer who is named by the common council.

In addition to the weights and measures work, the State inspector and city sealers are required to test all water, gas, and electric meters in the State. These tests of meters have not been made for the reason that no funds have been appropriated with which to secure the proper apparatus or to meet the necessary expenses of conducting this inspection.

This department recommended the abolition of fees, but the legislature failed to take favorable action on the subject. Some friction has been caused by reason of the collection of fees, and we feel sure that the elimination of fees for inspection work would materially help this department in enforcing the weights and measures law.

The last legislature failed to pass an appropriation bill. At this writing the legislature is in special session, called for that purpose. It is not known what appropriations will be made, but we are in hopes, however, that ample funds will be provided with which to carry out in an efficient manner the weights and measures law of this State.

This department is indebted to the Bureau of Standards and its courteous officials for the help and cooperation which has been given since its organization.

The State inspector regrets his inability to attend this conference, but hopes that at the next meeting he will have the pleasure of attending and making the personal acquaintance of the officials who are carrying on the important work of weights and measures.

[1] These reports are those which were submitted in writing to the secretary of the conference for inclusion in the record.

CALIFORNIA.

By Charles G. Johnson, *Superintendent of Weights and Measures.*

Mr. Chairman, the State of California is for the first time represented at this conference by a delegate. His coming signals the successful termination of five years of constant effort to write into the statutes a weights and measures law that would prove effective, comprehensive, and constitutional.

The California State Department of Weights and Measures, from its inception, June 10, 1914, has pursued a vigorous organization campaign along educational and tactful lines seriously impressing the city and county supervisors of the merit and the necessity of weights and measures inspection and regulation. To-day 58 weights and measures officials are employed, fully equipped with modern apparatus, and doing excellent work.

The weights and measures laws of California, as amended by the last legislature, are model laws. They give to the superintendent the authority to adopt tolerances and to establish a standard net weight or net measure of commodities, and provide for the adoption of opinions and regulations as issued by the Secretary of Agriculture appertaining to weights and measures.

Tolerances and specifications as suggested by the Bureau of Standards were adopted and have been successfully enforced.

The officials have been carefully instructed and schooled in their duties. They work in full harmony with the State department and they have favorably impressed the people of the State, in a dignified and effective manner, that a uniform standard of weights and measures is essential to commercial harmony and prosperity, and the merchants are cooperating to establish conditions that will obviate unfair competition by eliminating and discarding trade customs that were not equitable.

CONNECTICUT.

By Thomas F. Egan, *State Superintendent of Weights and Measures.*

Mr. Chairman, it is a pleasure once again to take part in this conference as a representative of the Connecticut weights and measures department. In this connection the delegates present may be reminded that it was mostly through the efforts and work of former delegates to these conferences that the present weights and measures law of Connecticut was brought to the attention of the Connecticut General Assembly at its January session, 1911.

The law just referred to does not give as much benefit as might be obtained, if other laws had been specifically repealed, since the repealing section or clause—"so much of any act as is inconsistent with the provisions of this act is hereby repealed"—does not always operate as a sufficient repeal.

The legislative committee that reported our weights and measures law to the general assembly intended that the authority and duties of town sealers should cease if the law was enacted. It was realized that the small towns could not afford to pay a salary to the town sealer and fee system was objectionable. The committee, however,

did not succeed in repealing certain statutes, because it was found after the law had been approved, that the statutes referred to were not inconsistent with the later enactment; consequently, town sealers continued to perform duties and collect fees therefor.

During the January, 1915, session of our general assembly, the following bills relating to weights and measures were introduced:

House bill No. 454, providing that cities of 15,000 population and over should appoint city sealers. This bill was favorably reported, but it was defeated.

House bill No. 252, making it the duty of sealers to examine gas, water, and electric-light meters. This bill did not pass, as it was reported that the pubic-utilities commission could perform the duties provided for in the proposed law.

Senate bill No. 429, authorizing the sale of certain articles, vegetables, etc., by weight was quite strongly opposed by representatives of certain interests.

A substitute for House bill No. 288 provided the maximum amount of $1,800 for compensation for county sealers. The bill was afterwards amended, providing that a county sealer might be paid such compensation as should be fixed by the senators and representatives, residents in the same county, at their biennial meeting. This amendment to chapter 280, public acts of 1911, was adopted, the amendment taking out the former maximum amount of $1,000, and leaving the amount of salary for the county sealer to be determined by the senators and representatives of his county.

House bill No. 458, concerning weights and measures. This bill was drawn up at the request of a member of the general assembly, and, on account of lack of time, the officer copied the Ohio law regarding the sale of fruits, vegetables, and a large number of commodities by numerical count, weight, or measure. The bill was introduced and referred to the judiciary committee, who assigned it for hearing. At the first hearing a continuance was asked for by some one who was opposed to the law, and, after a postponement of two weeks, lawyers from Boston, New York, New Haven, and representatives of the Wholesale Grocers' Association, the retail meat dealers, and others, appeared before the committee and offered strong opposition. The member introducing the bill had, in the meantime, received information that a part of the Ohio law, which was under consideration by his committee, had been declared unconstitutional, as the result of a prosecution in Ohio. The bill was reported unfavorably and rejected in the House.

The enforcement of our weights-and-measures law, chapter 280, public acts of 1911, is productive of much better conditions as regards the sale of food, coal, and other articles than formerly existed.

Regarding the sale of print butter our officers have been diligent; several prosecutions for short weight having been instituted, but only in cases where it was certain that the dealer had a knowledge of giving short weight. Prosecutions have also been brought and penalties imposed in cases where the container was weighed and sold with the butter. We also had prosecutions against two creameries for selling short-weight butter. Fines were imposed in each case. One of the concerns, on account of the conviction, was obliged to go out of business.

Successful prosecutions under the net weight package law have been had in several cases since a decision by our supreme court, entitled, State of Connecticut *v.* Thomas H. McGee, an appeal from the court of common pleas for Fairfield County, in which case our supreme court decided that the law was constitutional.

Another case, State *v.* John R. Woodhull, wholesale butter dealer, is pending in the court of common pleas, Fairfield County, at the present time, claim being made that the case will be sent to the supreme court on some law point.

DISTRICT OF COLUMBIA.

By J. H. Sherman, *Superintendent of Weights, Measures, and Markets.*

Conditions in the District of Columbia are far from satisfactory, and for a cause which is beyond our control, but which you gentlemen, delegates to this conference from the various States and cities, can reach and correct if you will.

The District has no suffrage. We are governed by Congress, which is a body of 500 or more men of varying qualifications and points of view; but none of them come from this District and but few ever really learn the District's needs. Now, no matter who these men are or what they are, whether elected as Democrats or Republicans, Bull Moose, Socialists, or Prohibitionists—it makes no difference—every one of them when elected was pledged to economy. You gentlemen from the States elect these men and send them down here to Congress with every man of them pledged to economy. When they get here they find that the only place on earth where they can economize without losing votes is in the District of Columbia.

What need to say more to practical men? We are allowed the same number of inspectors we had in 1900, although the needs of the work have doubled in that time. Our most up-to-date legislation was passed in 1896, and is about as tight as a sieve. Our equipment is inadequate, and we have to economize on car fares. Although all employees are paid salaries from general funds independent of the amount of fees collected, we still are hampered by the fee system.

Under these handicaps all that can be done has been and is being done. Further improvement must largely depend upon your influence upon your local Congressman.

We are using the conference tolerances, but have no legislation governing types definitely enough to permit of the adoption of the conference specifications, although we approve of them and would like to enforce them. For years the shortage of working force in the growing city, coupled with positive regulation requiring inspection of all scales each six months, has forced a steady reduction of the capacity of the tests made, until last year heavy wagon scales were being tested with a 1,000-pound corner test, 1,000-pound scales were being tested to 300 or 400 pounds, and lighter scales to one-half their rated capacity.

During the year now closing this policy has been reversed. Considerations of revenue have been disregarded and adequate testing ordered. All scales up to 1,000 pounds are now tested to full capacity. Scales from 1,000 pounds to 2 tons are tested with the 1,000-pound test, and all heavy scales get a 1-ton corner test, which is frequently

doubled in cases of doubt. The improvement caused by this change has been very evident, but it is secured at the expense of frequency. We should be testing not less than twice yearly and as much oftener as necessary. With the present small force that is impossible if adequate tests are to be made, and we are therefore able to reach these scales only about once in each 8 or 9 months. The merchants desire a stricter supervision.

I think all here will agree that the National Capital should be second to none in caring for its citizens. All here will agree that the best welfare of weights and measures work demands that it be not retarded at the Capital City. Therefore I appeal to you gentlemen from the States:

Go back to your Congressmen and impress upon them your appreciation of this need at the Capital. Tell them to permit us one-tenth as much for weights and measures as they spend on parks, and we can make you a better report next year. Only you can do this. The people of Washington are helpless.

IDAHO.

By J. K. White, *State Sealer of Weights and Measures.*

I beg to submit a report of inspection of scales, weights, and measures, under the law passed by the twelfth session of the Idaho Legislature.

Scales inspected:		
Scales found O. K. at time of inspection	269	
Scales repaired and sealed by deputy	186	
Scales condemned for repairs	133	
Scales permanently condemned	53	
		641
Measuring pumps inspected:		
Found O. K. at time of inspection	26	
Adjusted and sealed	71	
		97
Measures (all kinds and sizes) inspected:		
Sealed O. K	307	
Condemned	333	
		640

In addition to the above inspections hundreds of packages of food commodities have been inspected for short weight and short measure.

Our work during the current year has been confined to wagon scales and stock scales. This State is exerting every influence to persuade the larger cities to establish a department of weights and measures inspection, and I feel that much good work will be accomplished when this organization has been completed.

INDIANA.

By J. T. Willett, *Chief Inspector of Weights and Measures.*

Mr. President and delegates, in reporting the condition of the weights and measures department of Indiana, I am pleased to say that the work is progressing very satisfactorily.

This year no changes or amendments were made to our present weights and measures law; we did, however, introduce two bills at the last general assembly. One was a "sale by weight law" which I am pleased to say received very careful consideration, although it was lost. The other was the establishing of a "weight per bushel" of all dry commodities. This bill, like the other, was defeated.

There was no attempt made in any way to interfere with the State department of weights and measures as I understand there was in other States.

I wish to take this opportunity to thank the Bureau of Standards for the services rendered to the State of Indiana through sending the Government test cart into our State under the able direction of L. R. Boyer of the bureau, who made tests of a number of railroad track scales. This work covered the inspection of 44 scales which were located in all parts of the State. Of this number about 67 per cent were found incorrect. These figures are taken from statistics at the Bureau of Standards. We feel a great deal of good will result from the inspection of these scales by the Government test car.

Other branches of the weights and measures work are progressing very satisfactorily through the efforts of the State and local departments. Indiana is represented at this conference by one State and three local inspectors.

Gentlemen, I thank you.

KANSAS.

By Edwin F. Stimpson, *Deputy State Sealer of Weights and Measures.*

Conditions in the State of Kansas in regard to weights and measures, are very much as they have been for the past few years. No new cities have established inspection of weights and measures. The city of Parsons has had this matter under consideration for some time, but as yet has not passed an ordinance establishing the inspection of weights and measures. The State food inspectors continue to inspect the weights and measures in the grocery stores and other stores in which food is sold and in that way keep the smaller weights and measures in fair condition. Likewise, the drug inspectors keep watch of the prescription weights and other weights and measures in the drug stores. As yet, there is no adequate provision for the inspection of wagon scales, elevator scales, track scales, and other similar weights and measures. There has been a great addition to the number of measuring pumps for the sale of gasoline to motorists within the State and there is no adequate provision for the inspection and regulation of these pumps.

Three bills were introduced in the legislature which met last spring, looking toward improvements of these conditions, but none of them were passed. These were as follows:

1. A bill to revise the fee system so that the fees charged would come nearer to paying the expenses of inspection, which would have enabled the State sealer to do more work throughout the State, by deputies from his office.

2. A bill to repeal our present berry-box section, which authorizes a liquid quart box for berries, and also, to repeal the obsolete oil section of the law, which requires certain oils to be sold at specified weights per gallon.

3. A bill which would make the maintaining of false or illegal measures, especially liquid measures, in or near the quantities of dry commodities exposed for sale presumptive evidence that these commodities were being sold by these false or illegal measures.

It has been found very difficult to get convictions for the above practice under the present law, and it was hoped that this law could be passed, which would throw the burden of proof the other way around.

MASSACHUSETTS.

By THURE HANSON, *State Commissioner of Weights and Measures.*

I am glad of the opportunity of being here to-day and to report on the progress of our work in the Commonwealth of Massachusetts. Since becoming commissioner of weights and measures I have found that there is more to be gained by way of practical information at this annual conference than from any other gathering of weights and measures officials.

Ours is a work which is constantly growing in scope and importance, and it is our duty to acquire as much knowledge as possible, for those in charge of the enforcement of laws governing weighing and measuring devices must keep abreast with the times in order to administer their offices successfully.

Four new laws relative to my department have been enacted by the General Court of Massachusetts in 1915. One provides for the licensing of hawkers and peddlers by the commissioner of weights and measures; another relates to packing, grading, and sale of apples; another relates to the testing of weighing and measuring devices used in State institutions and departments. The legal weight of the bushel of fine salt has also been changed from 50 to 70 pounds.

Heretofore the licensing of hawkers and peddlers has been done by the secretary of the Commonwealth. Under the law just passed, the commissioner of weights and measures may grant a license to go about exposing for sale and selling any goods, wares, or merchandise, except jewelry, wines, spirituous liquors, and playing cards to any person who files in our office a certificate signed by the mayor of a city, or by the majority of the selectmen of a town, stating that to the best of his or their knowledge and belief the applicant therein named is of good repute as regards morals and integrity and that he is or has declared his intention of becoming a citizen of the United States. This law will give our department thorough supervision over hawkers and peddlers and is a forward step in the work for which our department was organized.

The law relative to packing, grading, and sale of apples fixes the standard barrel and provides for the grading and packing of the fruit. The dimensions of the barrel, as defined in section 1, are the same as required by section 1 of the "national apple barrel law" (H. R. 21480, approved Aug. 3, 1912), which became effective in interstate trade in July, 1913.

The ordinary flour barrel conforms to these dimensions, and the cubical content, 7,056 cubic inches, gives a capacity of exactly 105 quarts, dry measure.

However, this act differs from the national law in that it also makes provision for a standard box for apples. A box conforming

to the prescribed dimensions would have a cubical content of 2,173.5 cubic inches, and would therefore be capable of containing one bushel (2,150.42 cubic inches) while also permitting the box to be covered, so as to make it a closed container without bruising the fruit.

This legislation was recommended by the State board of agriculture with the idea that the standardization of the grading and packing of apples in this Commonwealth would aid materially in meeting the competition of Western States and in encouraging the development of orchards in our agricultural districts.

Investigation by men attached to our office last year showed that weighing and measuring devices used in State institutions were incorrect to a considerable extent, and that in some instances the Commowealth was losing money because of this fact.

After a very careful study of the situation, legislation was recommended. I am glad to report that a law has been enacted providing that the commissioner of weights and measures, or his inspectors by his direction, shall at least once annually test all scales, weights, and measures used in checking the receipt or disbursement of supplies in every State institution or department, and shall mark the same in accordance with the results of such tests. The commissioner shall report his findings in writing to the executive officer of the institution or department concerned, and, at the request of said officers, the commissioner of weights and measures shall appoint in writing one or more employees then in actual service of such institution who shall act as special deputies for the purpose of checking the receipt or disbursement of supplies.

I am pleased to report that we have had the marked cooperation of officials throughout the State. The mayors and councils of cities and the selectmen of towns are learning more and more about the importance of our work and are working with us hand in hand. The sealers in the various cities and towns are firm in the belief that cooperation will secure the best results, and they are doing everything in their power toward securing harmonious action. The growing importance of the work of those in charge of the enforcement of laws relative to weights and measures is being felt generally throughout Massachusetts.

MICHIGAN.

By Burr B. Lincoln, *Deputy Dairy and Food Commissioner, in Charge of Weights and Measures.*

Mr. President, ladies, and gentlemen, Michigan has made progress in the enforcement of weights and measures laws. The enforcement of the weights and measures law was placed with the dairy and food department, and, as our appropriation is very small, the work rests principally in educating city and county sealers when they are appointed and in visiting the old sealers and seeing to it that there is a uniform enforcement of the law. Our food inspectors condemn all illegal measures such as bottomless measures and those whose diameters do not come up to the model specifications as established at the last conference. The measures condemned and destroyed number several thousand some months. Inspectors also do a large amount of reweighing and condemning scales of certain types, such as those which have jump charts, cheap spring scales, etc.

In the matter of legislation we secured the passage of a Babcock test bottle law and a scale bill, modeled after the Bureau of Standards' specifications, and we are becoming equipped to test all bottles submitted. Our creamery inspectors will carry small pocket balances to test cream scale weights and scales. We also secured the passage of a milk-bottle bill placing the manufacturers under bond. This bill is modeled after the Wisconsin law, except that our tolerances are much smaller. The rest of our proposed legislation failed in passage largely for the reason that certain of the members of the legislature undertook to place our department with the Michigan agricultural college. This resulted in a strenuous fight, and, al though we won that battle, most of our proposed legislation went by the board. A bill was passed amending our net-weight law so that vegetables and fruits are exempt from stamping contents on the outside of package. This was a step backward.

We find our educational exhibits are very helpful in the work, and any State might profit by same. The railroads furnish our department and the State board of health with two baggage coaches, which they draw free of charge during the month of August. We have an exhibit of both foods and weights and measures. We also have an exhibit at the State fair and at different cities where we hold "good health" weeks. One county inspector exhibited at his own local fair. This year we intend to extend the number of exhibits, as we find them of great assistance in educating the people as to the value derived in having weights and measures officials and inspection work.

We held a conference of State, county, and city officials last year at Detroit, at which great interest was manifested. We were ably assisted by J. C. Connors, Fred Downing, and F. S. Holbrook. We will hold another in the same city July 6, 7, and 8 of this year, and hope you all will be present.

MINNESOTA.

By Charles C. Neale, *State Commissioner of Weights and Measures.*

Weights and measures conditions in Minnesota are now on a fairly satisfactory basis, but of course there is great room for improvement. Speaking from a mechanical standpoint, as far as scales and measuring devices are concerned, the trade is in very satisfactory condition, but it is to be regretted that our laws are still inadequate in the matter of compelling sales by weight, except in the commodities coal, charcoal, and ice. We are still in that unsatisfactory situation where commodities may be generally sold by indefinite quantity, such as a heap, pailfull, boxfull, bagfull, etc., without reference to legal measures, but when the terms of standard legal measures are used in a transaction in selling dry commodities for instance, our law is comprehensive enough to require that pounds shall be given for any mentioned measure as established for that particular measure.

We have been very successful in ridding the State of "snide" berry boxes, but have found that since the net-weight package law became operative, short-measure boxes are again coming into this

State and the shippers claim the protection of interstate commerce in the matter.

It is gratifying, however, to know that our local wholesalers and retailers are anxious to cooperate with the department in the proposition of full weights and measures in general.

This department is now on an appropriation basis, except for extra and special tests, and since the department was first established on a straight-fee basis, we are in a position to speak with authority as to the great advantage of free inspection rather than a fee inspection, for we have now had experience with both systems. The weights and measures department of Minnesota had its own troubles during the last legislative session, but perhaps no more than the same service had in some other States, but on the whole the legislative body desired to maintain the department as an entirety, and some of the criticism and unfair charges against the department were simply the effect of a general cry against the fee system, which crystallized in the minds of some legislators in the form of a belief that the department must be a source of trouble and unfairness.

The scope of the work in Minnesota may be briefly summarized as follows: Minnesota has an area of 84,682 square miles. This territory is divided into 86 counties, having a total population at the present time of about 2,200,000 people.

There are 2,100 cities and villages in the State, in which cities and villages approximately 28,000 business firms, large and small, are engaged in commercial pursuits. This commercial work is done over approximately 38,000 scales with 81,000 weights and 51,000 measures. Since a limited appropriation has reduced the department to 12 regular inspectors in the field, it is very evident that the territory can not be completely covered in one year as contemplated by the provisions of the weights and measures law.

However, we are determined to do our best in going as far as we consistently can in the work, and we take some satisfaction in knowing that Minnesota has been placed on the weights and measures map of this country, and will always feel that the Bureau of Standards was the most important factor in awakening this State to the necessity of weights and measures supervision.

NEW HAMPSHIRE.

By James F. Brennan, *Special Representative.*

There being no valid argument advanced, or attempted to be advanced, in opposition to an honest and uniform enforcement of correct weights and measures laws under State supervision, it is indeed strange that there still are some States in this Union which, through alleged ulterior influences, have failed to protect purchasers in this matter of such admitted importance to the people. I have the honor to be a delegate to this conference representing the good old State of New Hampshire, a State second to none in the Union in the honesty and intelligence of its people, and yet the only State in New England where there is no State supervision to protect its people from imposition in this iniquitous cheat of short weights and measures and where the purchaser is being constantly and grievously wronged, a State which has become the dumping ground of all man-

ner of incorrect scales, and where injustice to purchasers runs rampant and unchallenged. All this in violation of the will of the people, against the wish of the governor, and contrary to the overwhelming vote of the popular branch of our legislature, simply because our senate—as was the case in the senate of the previous legislature—stood across the path of this movement for an honest deal in relief of the people. That small body of men—too small, indeed, as it is thought—constitutes at the present time the only branch of any New England legislature in opposition to State supervision of weights and measures, and maintaining the only citadel in the northeastern section of our country protecting those who seek that which does not belong to them.

In 1910 the National Bureau of Standards made a careful examination of conditions in New Hampshire, and especially in Concord and Manchester—this being three years before the excellent law of 1913, relating alone to Manchester, was passed—and it was found that, upon the basis of the shortage found in those two cities, $700,000 was wrongfully taken by short measure each year in food supply from the consumers of the State, and it is fair to presume that conditions in those two cities were no worse than the conditions in the country towns.

Those people of our State who have investigated this matter were aroused to the true condition, and the women's clubs aided materially in the movement for reform.

It was my privilege to introduce in the house of representatives a bill which sought to place our State abreast of her sister States; it was drawn to conform to our conditions from the standard law which the department at Washington recommended and to which an expert of that department had offered some amendments which recent experience and study had suggested. This bill was carefully considered and favorably reported by the judiciary committee of the house; it received also the favorable recommendation of the house appropriation committee and overwhelmingly passed the house, but was strangled to death in the senate. It is up to the members of that body who voted to kill this bill to explain to their constituents their act. It would seem that if the people are to get an honest regulation of weights and measures law in our State they must see to it that they elect a senate who will act in their interest.

New Hampshire, unfortunately, has no law to permit of State supervision of weights and measures, but the governor and council wish to aid in the good work of this conference, and our people still have hopes that the Granite State will be permitted by the next senate to take her place with her sister States in remedying a condition which is as much a robbery as would be the giving of 96 cents in return for a gold dollar.

NEW JERSEY.

By William L. Waldron, *State Superintendent of Weights and Measures.*

Mr. Chairman and gentlemen, if we glance back over the past few years we can not help coming to the conclusion that important changes for the better have taken place in our work, that progress has been made, that our aims and objects are becoming better under-

stood, and that we are becoming more efficient in our line. The purchasing public, too, is more alert than ever before and affords splendid cooperation. The attitude of the consumers is traceable, to my mind, to the fact that weight-and-measure officials are more in earnest to-day than they used to be. If public officials take their work lightly, it can be stated without fear of contradiction that the public will do the same; but if officials show themselves in earnest, so will the public. The net result will be the accomplishment of more work in a better way, to the satisfaction of all concerned.

As an illustration of the progressive trend weight-and-measure work has taken within the last two or three years, it might be well to cite the passage of the net-weight-container law and the Tuttle barrel act. Both are splendid pieces of legislation and will go far toward improving conditions. The laws were greatly needed and will prove a source of benefit to manufacturers, consumers, and officials alike after their provisions have become generally understood. The passage of the bills ought to eliminate the impression that Congress will not enact weight-and-measure legislation. A healthy beginning has been made and, by working harmoniously, it ought to be possible to have other needed laws enacted. In relating instances of progress, I must not forget what my own State, New Jersey, is doing. We have not lost sight of the need for uniformity, and our 1915 legislature changed the weight per bushel of two agricultural products, so that both now conform with the standards established in adjoining States. The changes will eliminate the confusion formerly existing. Competition will also be placed on a fairer and firmer basis. Dealers affected by the changes in the law have strongly approved of them. Uniformity in the weight of agricultural products in the laws of adjoining States is very important and is a subject that should claim consideration from every State official present at this conference.

In my remarks last year I drew attention to some of the rather unusual conditions then existent in this State; this year it is pleasing to me to be able to say that general conditions in New Jersey are better than ever before. Our law is more thoroughly understood and complied with, our officials are uniformly capable and courteous and work harmoniously together, and the purchasing public generously cooperates. Reports to the state department from municipal and county officials for the year of 1914 showed that more sealed equipment was in use, less equipment had been condemned and confiscated, and that there were fewer prosecutions, with a consequent reduction in the amount of fines imposed, in 1914 than any preceding year. These are significant facts, and can be safely taken as an accurate indication of what has been done and what is being done. Mentioning our activities brings to my mind a very important work we have started on this year. We have started to inspect the scales and weights used in the preparation of prescriptions in drug stores. Heretofore we have confined our efforts to counter equipment, which was usually satisfactory. The present campaign, I think, is the first one of its kind to be instituted anywhere, and the results from the preliminary inspection more than justify the continuation of the work. I am familiar with the fact that our inspection of the standards will not result in any decrease or increase in the prices of pre-

scriptions, but it will mean that the purchaser will get all that is paid for. In addition, druggists will be certain of the accuracy of the equipment they are using. In a vital case a difference of a few grains might seriously hamper the ultimate outcome of a patient's welfare. For that reason we are glad we have started on the work. The larger cities of the State have already received attention, and the smaller places will be given attention as soon as possible. It has been found that many of the weights in use were short and that some of the scales were not working as they should. Druggists who have been visited are outspoken in praise of the movement and have readily cooperated. Officials present desirous of learning more of the drug-store inspection may do so by communicating with our department. Superintendents who have other equipment in good condition might well take up the drug work. It requires additional equipment of a finer kind; the work itself is more careful and requires patience. It will be time well spent, and the public will be the gainer.

NEW YORK.

By JOHN F. FARRELL, *State Superintendent of Weights and Measures.*

Mr. Chairman and gentlemen of the conference, weights and measures in the State of New York is a vital, living issue, and the citizens generally of the State have become peculiarly interested in the questions affecting not only weights and measures, but weighing and measuring devices. The individual resident of the State of New York has been saved thousands of dollars a year on account of the work, not only of the State department but of the separate city and county departments, which are under the general supervision of the State department. The specifications and tolerances as promulgated by the State department are observed generally throughout the State.

The Empire State is splendidly situated in that it has upon its statute books the most advanced legislation covering weights and measures of any State in the Union.

Chapter 81, Laws of 1912, known as the net-container law, has been the forerunner of all laws covering the plain and conspicuous marking of the net contents of containers. There was no law enforced in this country which could be followed by New York State, and of necessity there are some minor changes which should be made before a report of its perfect working can be made. A report of progress certainly does not cover the work done within the Empire State.

The department of weights and measures of the State of New York with the cooperation of the local officials under the wise laws of the Empire State are correcting many abuses which have grown up in the different trades and in the trade customs. The State superintendent has appeared before many exchanges and associations of different kinds and has stated at such meetings the exact meaning of the laws and the rulings of the department, and has succeeded in procuring the cooperation of not alone the individuals but the associations themselves in the correcting of these abuses.

The department of weights and measures of the State of New York is more of a department of commerce; it acts as an intermediary

between the purchasing public and the sellers, and demands that substantial justice be doled out to both sides of the contract. What success the department has achieved is attributable to the experience and enthusiasm of the individual members of the department and the help and encouragement it has received from outside sources.

OHIO.

By Fred C. Albrecht, *Chief Inspector of Weights and Measures.*

Since the last annual conference Ohio has made excellent progress in the work of the weights and measures department. Weighing and measuring apparatus is more carefully inspected and tested than ever before, with the result that conditions are greatly improved. The specifications and tolerances as drafted and submitted by the committee and approved by the last conference have been adopted by the agicultural commission of Ohio, and while we have not been able to strictly enforce them, yet they have had the effect of working a material improvement in the results obtained.

We have had no new legislation affecting the work of our department, but we have had some adverse decisions in the courts. The sales-by-weight law, which provided for the sale of 94 different commodities by weight or numerical count, unless provision was made by contract in writing to sell otherwise, was attacked in the courts and carried through the supreme court, which held the law unconstitutional on the ground that the act placed an unreasonable and burdensome obligation upon persons engaged in lawful business and that it was an unwarranted exercise of police power. While the decision was a great disappointment, yet many of the merchants of the rural districts who discarded their measures when the law was first enacted have ignored the decision and are still selling by weight, claiming it is the only fair and equitable basis on which to do business.

We also have litigation pending against the law defining the height and width of dry capacity measures. Favorable decisions have been rendered in both the common pleas court and the court of appeals, but the case has been carried to the supreme court, where we are confident that the law will also be sustained. Both of these cases were instituted by the market venders and street peddlers, who are, as everyone knows, opposed to all restrictive laws against dishonest practices in weights and measures.

We have 80 county and 25 city sealers at work in Ohio, only 8 counties having failed to appoint sealers. This, I believe, compares favorably with other States, considering the time since the organization of the State department a little more than four years ago.

During the past year a total of all the weighing and measuring devices sealed was 3,656,990.

The total of all the weighing and measuring devices adjusted and repaired was 16,027.

The total of all the weighing and measuring devices condemned was 380,625, and the grand total of all the weighing and measuring devices inspected was 4,052,751.

In closing, permit me to mention the fact that now there are no short berry baskets or boxes used in Ohio. This was a difficult

problem to deal with, as the growers and shippers claimed they had ordered full quart and pint baskets and boxes, but that the manufacturers filled their orders with "snides" and "dinkies." Our department took the matter up with the manufacturers, and after some trouble made them understand that short baskets or boxes would not be tolerated, and that if any were found on the markets they would be confiscated and destroyed. We are glad to be able to report that the manufacturers have complied with the regulation and are now manufacturing only standard baskets or boxes.

OKLAHOMA.

By W. P. Haseman, *Director of State Bureau of Standards.*

A. STATUS OF WEIGHTS, MEASURES, AND TESTS IN OKLAHOMA.

1. Old existing laws provide nothing but weights for a limited number of commodities in certain measures and packages.

2. County sheriffs are enforcing officers for weights and measures, but there is no provision for standardization of their measuring.

3. New law passed this spring creates "State bureau of standards of weights, measures, and tests and of methods of weighing, measuring, and testing"; locates same at State university; provides that its word shall be the highest authority in the State; and provides for its control by a board of directors of at least three faculty members of the university, appointed by the president of the university.

B. ORGANIZATION AND PLANS OF BUREAU.

1. The present board consists of: Director, W. P. Haseman, professor of physics; assistant director, H. V. Bozell, professor of electrical engineering; assistant director, W. J. Wohlenberg, assistant professor of mechanical engineering.

2. This bureau has in contemplation the following work:

a. Standardization of standard test meters for electrical operating companies of the State under supervision of the State corporation commission.

b. Standardization of electrolysis specification for railways.

c. Standardization of standard test weights and measures for general use under the general supervision of the State board of agriculture.

d. Standardization of standard test meters for gas and water distributing companies under supervision of the State corporation commission.

e. Standardization of standard test apparatus for the determination of the heating value of fuels and the refrigerating values of ice.

f. Formulation of rules and regulations governing methods of all tests over which this bureau has jurisdiction.

g. Investigation of the industrial conditions throughout the State to enable this bureau to recommend industrial legislation which will be of general benefit.

h. In its work the bureau hopes at all times to cooperate with and receive the friendly counsel of the national bureau.

OREGON.

By Fred G. Buchtel, *Deputy State Sealer of Weights and Measures.*

Several new laws in relation to weights and measures were passed during the recent session of the legislature, and since the changes made were both excellent and important ones a brief outline of them may be of interest.

First: The machinery of enforcing the laws was changed by repealing the original act which required the appointment of county sealers by the county courts in each county and substituting a law providing for the appointment of district sealers, each district to be composed of a number of counties. This has proven beneficial in many ways. Primarily it promotes efficiency, as the men devote all their time to the work and naturally become more proficient; secondarily, it allows of a more economical administration of the laws without the sacrifice of efficiency. In addition, the appointive power was changed from the county court to the State sealer. This makes possible the selection of men fitted for this particular work, thereby enabling the State office to exercise closer supervision over the field work; and it places the responsibility of enforcement on one individual and in one office, thus eliminating that division of authority which in the administration of any law frequently causes it to become useless for the purposes for which it was passed.

Second: The State office was empowered to adopt such tolerances and specifications as were recommended by the National Bureau of Standards, and the same will be issued and placed in effect very shortly, their adoption being important at this time, as they place all purchasers upon an equal footing, and prevent the flooding of the State with inferior or faultily-constructed apparatus, the sale of which has been legislated against elsewhere.

Third: The dry measure as a means of determining quantities was abolished, and all commodities heretofore commonly sold by dry measure must hereafter be sold upon the basis of net weight or by numerical count. This section is a step in advanced legislation, is for the protection of purchasers generally, and will enable the merchants to deliver correct amounts, which is practically impossible where a capacity measure is used to estimate the quantity of dry commodities.

Fourth: The berry boxes were standardized, following the suggestions of the conference, with the exception of the "half-pint box," which was not included, as apparently there was no particular necessity for it in our State. The principal object to be obtained by the standardization of boxes is the elimination of the unnecessary ones, so as to enable the purchasers to more easily determine what they are buying.

In general: The sale of wool, coal, and ice was regulated, a requirement being that in all sales of these commodities, a definite statement be made as to the amount or quantity delivered; a standard sack of potatoes of 100 pounds was provided for; the sale of oysters was regulated by limiting the amount of water that can be included in the container; and the sale of various other commodities were regulated, as well as improvements made in the wording of many sections with the end in view of clarifying the meaning, pro-

tecting the consumer, and safeguarding the interests of the business men.

In conclusion: While Oregon has only taken up this work of late, the State office being established in 1913, it is apparent that the efforts to better conditions are appreciated by the public generally, and much good has been accomplished. There is a noticeable effort made on the part of the business houses to comply with the laws by a careful handling of the commodities sold, and on the part of the purchasers to adopt the business-like method of ordering in specific amounts. This, in my opinion, is one of the greatest advantages gained by the establishment of a department of weights and measures, since the education of the general public (consumer and merchant), taken in conjunction with the primary work of the office in testing the equipment, insures the success of the department along the lines for which it was created.

PENNSYLVANIA.

By James Sweeney, *Chief of the State Bureau of Standards.*

Pennsylvania had been without any weight-and-measure laws for probably half a century until the act establishing a bureau of standards had been approved—June, 1911. The act directed the appointment of a chief of the bureau, whose duty it would be to have custody of the State standards of weights and measures, to compare, test, and regulate weighing and measuring devices of county and city inspectors of weights and measures. The act did not vest the chief of the bureau with any further authority.

The legislature of 1911 also enacted legislation authorizing the several cities and counties to appoint such number of competent persons as inspectors of weights and measures as was deemed proper to protect the people from the use of false weights and measures.

The amended act of 1913 makes it mandatory upon counties and cities to appoint one or more persons as inspectors of weights and measures. It also fixes a tenure of office and prohibits the removal of any inspector except for inefficiency or incapacity. Where the inspector is charged with any violation of the law, he must be furnished with a written statement of the charges, and can not be removed until the charges are investigated by the appointing power. The law requires that the inspector shall have reasonable notice of the hearing, and may be represented by counsel, and is permitted to offer any testimony or produce any witnesses which he believes to be necessary in his behalf.

The legislature of 1913 enacted the first commodity law ever placed on the Pennsylvania statutes. Previous to the passage of this act the State of Pennsylvania had a standard weight per bushel for but 17 of the various commodities. The act of 1913 establishes a standard weight per bushel for 81 commodities. Wherever any of the commodities named in the act of assembly are sold by the subdivisions of the bushel, the subdivisions must contain the fractional number of pounds as fixed by law for the bushel.

This act also directs the chief of the bureau of standards to establish a tolerance on goods that are sold in package form which are

subject to losses through shrinkage or evaporation. It also directs the chief to fix exemptions on small packages.

The provisions of the act require that where commodities are sold in containers the net quantity of the contents shall be clearly and plainly marked on the outside of the container in terms of weight, measure, or numerical count.

The legislature of 1915 has amended the commodities act by establishing a standard basket or tray. These baskets or trays are designated as the standard pony basket, the standard basket, the standard jumbo basket, and the standard tray. Those baskets have certain dimensions. Wherever the baskets are used in the sale of vegetables and fruits and contain the dimensions named in the act, it will not be necessary to mark or brand them in any way to indicate the quantity of their contents.

The act provides that in determining the dimensions of the standard baskets the measurements must be taken on the inside of the basket, except as to the standard tray. The act specifies the size of the material which shall be used in the manufacture of the standard tray. The measurements to determine the dimensions of the tray are taken from the outside.

The law is also amended to read that whenever vegetables or fruits are sold in quart baskets or boxes, or quart containers of any kind, the cubical contents of such boxes or containers shall be $67\frac{1}{5}$ cubic inches. If this standard quart box is used the law does not require that it shall be marked to indicate the quantity of the contents. All other containers, baskets, or boxes that may be used in the sale of commodities, not having the dimensions as specified in the act, are required to have marked thereon the net quantity of the contents.

It being a recognized fact that it is the duty of the State to safeguard the people's rights by the enactment of legislation that will guarantee to them that they are secured protection in their dealings with those whose desire for increased profits would cause them to resort to the practice of giving short weight and measure, the enactment of the weights and measures law in Pennsylvania has been the means of securing to the consumer the full quantity of his purchase. It has been demonstrated that this law not only protects the consumer, but protects the honest merchant from the competition which he encountered from the dishonest merchant, and, as a result, we have had the cooperation of the merchants and their organizations in the enforcement of the provisions of the law.

RHODE ISLAND.

By William F. Goodwin, *State Sealer of Weights and Measures.*

Mr. President, my report will be very brief. I will say the sealing laws in our State are being carried out as in years past with the usual results. We have had no serious troubles or complaints which were not adjusted to the satisfaction of all parties concerned. I recognize the fact that better results could have been had if the financial conditions were such as to enable the State sealer to give more attention to the subject. We are all using great economy at the present time to reduce expenses, and Rhode Island is no exception to this rule. We have had very few prosecutions for vialations of the seal-

ing laws, and I think that fact shows the merchants realize the importance of having their apparatus tested and corrected by officials appointed for this purpose.

We have not made any great changes in our sealing laws, and, with the exception of an amendment regarding the giving of short weight and measure and amending our laws for the sale of milk, nothing further has been done. We are waiting for the Federal laws being formulated by the Bureau of Standards and these conferences as represented by the several States so that we can adopt them when they become laws. This matter is a very slow process, judging from the conditions in our own State, and I realize the fact we will have to be patient and all use our best endeavors to encourage our representatives in Congress to render their aid and assistance to these measures at the proper time.

I am very proud in saying the governor of our State is greatly interested in our work, and after explaining the object of these conferences decided we ought to be represented here; and I can assure you it is a great pleasure and honor I have in representing Rhode Island on this occasion and to greet the officers of the Bureau of Standards and representatives of the sealing interests of the several States of our great Nation. I earnestly hope that our work will be such as to warrant its enactment by the Federal Government, and we will in the near future be able to adopt a Federal law that will bring uniformity in weights and measures to all the States.

I thank you for the kind attention.

SOUTH CAROLINA.

By E. J. Watson, *Commissioner Department of Agriculture, Commerce, and Industries.*

Mr. Chairman and gentlemen, I beg to advise that the efforts of this State so far toward enforcing the inadequate State law relating to weights and measures have been confined by the inspection force of this department to tests of scales and to testing the weights of such generally used commodities as flour, corn meal, mixed feeds, and produce. Our principal activity has been in the matter of weights of flour and meal, and we have been so persistent in that regard that we have almost run the short-weight man out of the markets in this State. We have had many cases, and in every instance have stopped the sale of the consignment, requiring that each sack be brought to full weight before releasing the goods and permitting them to go to the consumer. This method has been effective without having to resort to prosecutions, which, of course, could not have been instituted under any circumstances, owing to the fact that the shippers in more than 90 per cent of the cases were interstate shippers.

UTAH.

By Heber C. Smith, *State Sealer of Weights and Measures.*

Prior to the year 1911 the State auditor was ex officio sealer of weights and measures for the State of Utah. However, very little work, if any, was done under the provisions of the law as it stood

at that time. In 1911 the State legislature made some few changes in the law and placed the supervision of weights and measures under the State dairy and food department. The law, however, was a very unsatisfactory one, as it provided for the condemnation of incorrect weights and measures but made no provision for the disposition of same. This law also carried with it the foolish and embarrassing fee system.

In the fall of 1914 the United States Bureau of Standards worked in connection with the commissioner of the dairy and food department and a bill was drafted, patterned somewhat after the model State law approved by that bureau. According to this new law, the dairy and food commissioner is ex officio sealer of weights and measures. It is also provided that each city with more than 25,000 inhabitants shall have a sealer of weights and measures, whose duty it is to enforce the State law, and such cities are to equip such departments with all the office and field standards that are necessary to fully carry out the provisions of the State law.

At the present time, however, I am not entirely pleased with some provisions of our new law, such, for instance, as the adopting of the United States standards of weights and measures, especially as they pertain to bushels, half bushels, and pecks, and then prohibiting the sale by bushels, half bushels, and pecks, in that our law provides that every commodity sold in package form must contain the number of pounds and ounces contained in said package. Further, we have no standard as to the contents of bushels, half bushels, and pecks. Therefore, at the present time we are having a great deal of difficulty with the farmers and produce men in obtaining a strict compliance with the requirements of the law that each container must be marked with the net contents as to pounds and ounces. It seems almost impossible to stop them from selling by the bushel, half bushel, peck, etc., as the custom has been heretofore.

As our law pertains to the testing, sealing, and condemnation of weights and measures, we think we are provided with a means of getting rid of those weights and measures that are not susceptible of repair, as 10 days time is stipulated for the proper repairing of condemned scales, after which time, by confiscation they become State property. About 10 per cent of the scales that were in use heretofore have been found not susceptible of repair, and therefore are being gathered in by the inspectors of this department.

The new bill provides for the selling of butter, renovated butter, and oleomargarine in standard-sized packages of one-fourth pound, one-half pound, 1 pound, 1½ pounds, and multiples of 1 pound, thus clearing up a condition that heretofore existed in the butter trade, which was the grounds for many bitter controversies and resulted in considerable ill feelings. We attribute the indefinite law which we had to be responsible for the former condition in weights, but at present all butter dealers are on the same basis, and most are putting up their product in standard-sized packages.

We have experienced considerable difficulty with the vendors selling berries and small fruits in containers which did not have a definite standard, and which made competition very keen to the public's detriment. Under our new law, berries and small fruits

must be sold in standard-sized containers of 1 quart and 1 pint capacity, the quart having a capacity of 67.2 cubic inches and the pint a capacity of 33.6 cubic inches, the quart containing not less than 21 ounces and the pint containing not less than 10.5 ounces, standard dry measure. Also, all bread must now be sold as to net weight, with a label attached to each loaf, designating the net weight.

We have found this law to be a very great improvement over our old law, and a great deal of good is being accomplished in assuring the public of more protection in obtaining proper weights and also ridding the market—as stated before—of weights and measures which are not susceptible of correction or repair. However, as we operate under this law, faulty points present themselves, which we hope to correct at the next session of the legislature, but in the main we consider the weights and measures law which we have to be a splendid beginning, and we anticipate that a great deal of good will result, not only to the consuming public, but to producers of food products.

VERMONT.

By Hugh H. Henry, *State Commissioner of Weights and Measures.*

I regret that I am forced to report little of interest. An attack upon the department of weights and measures similar to that made in several of the States was made in Vermont, and as this took the shape of three different pieces of legislation it occupied two-thirds of the time of the session, and it was impossible to formulate and have enacted any new legislation of account. However, I am happy to report that in spite of the fact that every effort was made by the opposition they were without success, the department was sustained, and neither the department nor the law was weakened in any respect at the last session. There were so many and so persistent attacks made in the various States that I think best to call this to the attention of the conference, for it seems apparent that this general attack upon honest weights and measures throughout the country, as evidenced in the various States, is more than a coincidence.

I can honestly say that the inspections of the last year throughout the State show a marked improvement in condition of apparatus. Since scales, weights, measures, and other apparatus are in use continuously, there must necessarily be constantly a large per cent of condemnations, but we found during the last year that the percentages of error averaged very small, and at this time practically all the apparatus has been made to conform to the regulations of this department.

During the past year we have received little evidence of so-called short weighing, but I wish to say that our law discouraging this practice is so weak that it is practically useless, since the State is forced to prove intent to defraud in order to obtain convictions. This change was made by the legislature of 1912, and it was impossible to have that clause stricken out at the last session. I mention this provision to warn others to guard against the insertion of any such clause in their laws.

VIRGINIA.

By JOHN W. RICHARDSON, *State Superintendent of Weights and Measures.*

Since the ninth annual conference was held no material changes have taken place in this State, except that one or two county sealers have been appointed, and outfits furnished them through my office.

At that conference I outlined what efforts had been made to have enacted new laws based on the model law indorsed by the national association, which outlines can be found on pages 146–147 of the report of the ninth conference, held at the Bureau of Standards May 26 and 29, inclusive, 1914.

The law under which Virginia is now operating is in the main inadequate and falls far below the point of present needs, and I am again at work making stronger and simplifying the bill I presented to our general assembly at its last regular session held in January and February, 1914, and with the aid I hope to get from the combined wisdom of this annual conference, I expect to have enacted by our next general assembly, which convenes in January, 1916, on the second Wednesday, a law that will cover every emergency, and put in motion an up-to-date system in our weighing and measuring department of this State.

To this end I will have the assistance of the head of the State legislative reference bureau and leading members of the general assembly.

WASHINGTON.

By I. M. HOWELL, *State Superintendent of Weights and Measures.*

Practically three years have elapsed since the weights and measures law of this State went into effect, and while, generally speaking, a great deal has been accomplished, I feel that much more could have been done and much time and money saved had the whole matter been placed directly under State control. I believe that supervision by the State, unless accompanied with express power to hire and fire, is a mistake, and would suggest that the Bureau of Standards make some arrangements to assist the States at the next session of the legislature to eliminate county officials from all weights and measures work.

In this State, and I presume the same is true in others where county officials are made ex officio sealers of their county, we have found it practically impossible to keep the deputy out of politics, and we have found further that in some counties the deputy is prevented from following the instructions issued by the State on account of the effect it might have on some particular man in this county. The effect has been that the elimination of some particular type of scale in one county has caused the scale salesmen to take them out of that county and move to a county where the rules are less rigidly enforced. Again, there are a number of small counties that have little work, and the auditor or his deputy makes a hurried test of the scales in the county, technically carrying out the provisions of the law, but in reality doing the work an injustice by making it a farce.

We are now working very hard to effect certain combinations of counties which will provide a sealer with work the year round, and

will give him sufficient territory so that the cost per county will be small and the benefits derived will be in excess of the cost of operation. In some cases these combinations will embrace six counties, and all told the number of deputies will not exceed 12 in number where we now have about 39.

The last session of the legislature made no changes in the law, though we tried hard to bring the railroads and other common carriers under the same provisions as the vendor.

A number of convictions have been had in the State within the year, several of which were against the ice companies for failure to weigh the ice at time of delivery. An appeal was taken from the lower court to the superior court on the question of the constitutionality of the act, but the court sustained the lower tribunal and held the act constitutional.

Several appeals have also been taken by the packers after being convicted of failure to sell net weight, but the supreme court has not yet passed on the question. They are still insisting on including the weight of the paper, which is about 5 ounces to the package, in the weight of the ham or bacon.

We have recently been called upon to investigate the sale of toilet paper to State institutions, and found that the paper sold as 1,000 sheets to the roll contained approximately 685 sheets, or about 31½ per cent short. The company was notified, and a check for approximately $300 was turned into the treasury of the State.

A "get-together" meeting was called early in the year at North Yakima, and a large number of sealers and deputies were present. We held sessions from 8 a. m. till 10 p. m. for three consecutive days, during which time a number of matters were taken up, including the specifications and tolerances adopted at the national convention. These were for the most part accepted.

One of the worst features of our law, and the one that has done more for the grower and less for the consumer than any other, is the berry-box law. We adopted the dry pint and dry quart as the standard for berries, and the result has not proven satisfactory. Prior to the passage of this law we had in this State the pint and a half box, and practically all berries were sold in that manner. Since the passage of the law, however, nothing but pint boxes have been seen in the markets, and the price has remained the same as for the larger sizes.

This State is going to meet with the adjacent States of Oregon, Idaho, and California in the near future, and endeavor to agree on a standard for berry boxes as well as a systematic handling of weights and measures matters generally.

WEST VIRGINIA.

By J. H. NIGHTINGALE, *State Commissioner of Weights and Measures.*

Gentlemen, the State Legislature of West Virginia at its last regular session passed a modern weights and measures law. The law which was passed is for the most part the model law suggested by this conference. The State commissioner of labor is made ex officio State sealer of weights and measures. The director of the physical

laboratory of the State university is ex officio assistant superintendent of weights and measures. Two traveling inspectors are also provided for in the law. The law contemplates that the scientific work of the bureau shall be in the hands of the assistant superintendent. The operation and enforcement of the law shall be particularly in the hands of the superintendent and his two deputies. It is hoped that the State supervision of weights and measures will be taken up in a very short time and a modern law enforced in our State. The representatives from our State are therefore very much interested in this conference, and we hope to carry back many practical suggestions that will help us in the enforcement of this law.

WISCONSIN.

By Fred P. Downing, *Chief State Inspector of Weights and Measures.*

Mr. Chairman and gentlemen, the Wisconsin State department of weights and measures is affiliated with the dairy and food commission. We have eight sealers of weights and measures who are equipped to test everything from a prescription balance to a 10-ton wagon scale. These men are also required to do sanitary work in grocery stores and meat markets. The eight creamery and cheese-factory inspectors are required to do the testing of the scales and Babcock glassware in the 3,000 creameries and cheese factories of the State.

A number of important changes have been made in the Wisconsin statutes relating to weights and measures, and a report of this legislation will undoubtedly be of more interest to the members of this gathering than any summary I could make of the work we are doing.

Standard containers have been provided for the sale of fruits and vegetables of the capacity of 1, 2, 3, 4, 5, 6, 8, 16, and 24 quarts. Nonstandard containers must be marked in terms of weight, measure, or count.

The Wisconsin milk-bottle law has been amended so as to permit the use of bottles in which the milk or cream is pasteurized. These bottles are made sufficiently large to permit of the expansion of the contents in the process of heating.

The delegates present who come from States in which the dairy industry is important will be particularly interested in the law which places the manufacturers of Babcock milk and cream test bottles and milk pipettes under a bond of $1,000 to make their appliances in conformance with the regulations prescribed by the State superintendent of weights and measures. The law is quite similar to the milk-bottle law, but it is entering a new field inasmuch as it is an attempt to make the manufacturer of precision glassware responsible for its accuracy. The passage of this law will relieve the department of an enormous amount of testing inasmuch as only occasional tests of bottles and pipettes will then be required of sealers.

The powers of the sealer of weights and measures have been extended so as to include jurisdiction over weighing or measuring appliances kept, offered or exposed for sale or sold. This gives the sealer the power to inspect new appliances and under the provisions of this act we intend to rid the State of many of the cheaper and improperly constructed scales and measures.

The State superintendent of weights and measures under the old law was given the right to make rules and regulations and to prescribe tolerances. This law has been amended giving the State superintendent of weights and measures the authority to make reasonable regulations regarding the varieties or kinds of devices, attachments or parts entering into the construction or installation of weights and measures or weighing or measuring appliances which shall have for their object the tendency to secure correct results in the use of such appliances. Sealers of weights and measures are instructed under the terms of this law not only to seal weights and measures that are correct, but to refuse to seal any that are not in compliance with the regulations issued by the State superintendent of weights and measures.

REPORTS SUBMITTED BY CITY DELEGATES.

CHICAGO, ILL.

By William F. Cluett, *Chief Deputy Inspector of Weights and Measures.*

I will not take up much time in telling what Chicago is doing in the testing and inspection of scales and measures, and the enforcing of weights and measures ordinances, but will give you just a brief outline of the work done.

The department consists of the inspector of weights and measures, a chief deputy, 24 deputy inspectors, and 1 taximeter inspector. We have to examine and test all of the scales and measures, taximeters, etc., in use in the city once annually, except taximeters and scales of a capacity of 3 tons or more, which must be inspected once in every six months; we must also see that correct scales and measures are used correctly. We have a territory of about 200 square miles to cover, and when I say that we have a man's size job on our hands to cover it in the specified time with the force we have to do it with, I am simply stating the truth. During 1914 we inspected 106,937 scales and measures. This total does not include weights, since we do not keep track of the number of loose weights tested but test whatever number of weights each scale has in addition to the scale itself. Of this number we condemned 22,833 scales and measures. In order to disabuse your minds of the idea that Chicago must be an extra wicked city or that its dealers are exceptionally dishonest, I will state that 6,061 scales and 15,028 measures, making a total of 21,089 scales and measures were condemned because they did not comply with the new specifications and tolerances, which were put into effect January 5, 1914, and only 1,744 pieces were condemned because they were inaccurate. We made reweighings and remeasurings of deliveries made by peddlers, coal dealers, hay and feed dealers, building-material dealers, wood dealers, ice dealers, etc., and also in stores and places of business where we made purchases in 10,228 different instances. We had 291 cases in court in which fines amounting to $5,957 and costs were imposed, and we placed on file after giving a warning about 700 others where the violations were technical, small or an apparently reasonable excuse was given for the violation. We have had several new ordinances passed and also some amendments to our old ordinances.

One of the new ordinances relates to the mixing of coal and provides that where coal of two or more grades or qualities is delivered in the same load the delivery ticket must show the proportion or amount of each grade so delivered under a penalty of not less than $25 nor more than $200 for each offense. The department pursued the short-weight coal man so strenuously that he found it decidedly unprofitable to short weight, so in order to be able to undersell his honest competitor he resorted to the mixing of inferior grades of coal with coal of a better quality. Hence this new ordinance.

We also had an ordinance passed regulating the sale and delivery of crushed stone, bank sand, torpedo sand, and gravel. It had been the custom to sell this material by the cubic yard and deliver by wagon-load lots. The gravel roofers and building contractors appealed to us to help them to get what they were paying for. They said that this material was being delivered to them in wagons of such different shapes and capacities that it would take a civil engineer to figure them out. We immediately proposed that we draw an ordinance compelling the sale of this material in wagon-load lots or amounts less than wagon-load lots to be by standard avoirdupois weight in the absence of a contract in writing to the contrary. We suggested that there might be some difference if the material had an extra amount of moisture in it, and they agreed they would be better able to protect themselves if this material was sold to them on a weight basis than they would under the measurement basis even if there was some moisture with it. The ordinance as passed compels the sale of this material in wagon-load lots or in amounts less than wagon-load lots, in the absence of a contract in writing to the contrary, to be by standard avoirdupois weight, and it also provides that a ticket showing the net weight of the load must be delivered by the driver in charge of the wagon or conveyance at the time of the delivery of the material, and whenever the purchaser shall request that the weight be verified it shall thereupon become the duty of the driver to go forthwith to nearest scale in the neighborhood and reweigh the load.

Our taximeter ordinance, after being before the judiciary committee for over a year and after numerous hearings of all persons concerned, was redrafted and the rates of fare were reduced, and all public vehicles using the public cab and hack stands or the public streets for the purpose of carrying persons for hire or reward were required to be equipped with a taximeter.

Our ordinance compelling the sale of fruits and vegetables to be by standard avoirdupois net weight or by numerical count in the absence of a contract or agreement in writing to the contrary, and which exempted goods in "original packages," was amended so as to specifically exclude berries, cherries, currants, and other small fruits coming under "original-package" exemption. We have a special ordinance that governs the sale of berries, cherries, currants, and other small fruits that requires them to be sold, if in baskets or other receptacles, by standard pint or quart dry measure, or if in bulk by standard avoirdupois net weight. This amendment was made necessary because of a ruling by our courts in some suits we brought against dealers for selling berries in boxes not of the standard dry pint or quart sizes. The defendants' attorneys contended

that the berries were sold in the "original packages," and even though we had a special ordinance governing the sale of berries our ordinance compelling the sale of fruits and vegetables to be by weight or numerical count exempted fruits and vegetables if sold in "original packages," and therefore we could not recover because the berries were sold in "original packages."

The court held that there was a conflict in the ordinances and discharged the defendants, so in order to clear up the ordinances this amendment was passed. We also had an amendment to our ordinances passed providing that the inspector of weights and measures should provide a table of specifications and tolerances for weighing and measuring apparatus in the city of Chicago in conformity with that approved by the National Bureau of Standards.

INDIANAPOLIS, IND.

By Herman F. Adam, *Inspector of Weights and Measures.*

Mr. Chairman and gentlemen, I represent the city of Indianapolis, and wish to express my appreciation for being sent here by our honorable mayor, Joseph E. Bell, and members of the board of public safety of Indianapolis, who are men very much interested in honest weights and measures and who understand the vast importance of having their inspector here among men whose work is highly technical and a school of instruction of great value.

In submitting my report for Indianapolis, I wish to state briefly as to conditions prevailing in our city. During the State convention, February 9, 10, and 11, 1915, arrangements were made with one of our large department stores allowing the use of their window, where I had on exhibition a large collection of incorrect scales, weights, and measures that had been condemned. These demonstrated to the purchasing public just what the work of the weights and measures department is, and also showed how the inspectors are trying to protect the people. This had a far-reaching effect on the delegates assembled, and the same idea is being carried out throughout the State where they have a county or city sealer. There have been several other improvements established; the fee system has been abolished; a branch office has been opened at the market house, which has been of great benefit to the people; a card system, showing the date and time of inspection and of any irregularities, has been installed. The force has been increased by three deputies, who do detective work and answer complaints.

The department has taken up the measuring of gravel and sand wagon beds and found they were varying from 26 to 40½ cubic feet. Particular attention has been paid to this, and after a thorough investigation we find where the sand or gravel is delivered to a contractor that the foreman on the job measures the sand or gravel and the contractor pays for what is delivered. A standard load of gravel is 1½ yards or 40½ cubic feet. The abuse of short measure is often practiced when a party will buy a "load" of sand or gravel for personal use and is not familiar with the measurements. Considerable publicity has been given to this, and I feel it has had its effect.

Conditions in Indianapolis are good. With a constant watch on the iceman and vegetable peddler, faulty ice scales and short measures have been practically eliminated. The iceman is weighing his

ice for all private consumers, and on failure to comply with the ordinance arrest will follow, and the penalty is as severe as for short weight. During the year of 1914 there were 47 arrests made as compared with 29 arrests for 1913. The average penalty imposed was $10 and costs, amounting to $20 for each conviction.

During the year 1914, 22,175 inspections were made as compared with 15,212 for 1913; 15,411 scales, weights, and measures were inspected and approved; 3,632 places visited; 302 scales confiscated and condemned; and 619 measures confiscated.

A city ordinance is being drafted compelling the merchants and the peddlers to weigh all dry commodities. This will eliminate the stacking of measures with apples, peaches, potatoes, etc. Complications have arisen on several occasions in regard to weighing potatoes. Now, the question has come up on several occasions: Shall the merchant weigh or shall he measure potatoes? I say he shall weigh potatoes. Why? Because he buys them by weight and why shall he not sell them by weight? He will say: "You have sealed my peck measure, my one-half bushel measure, and my bushel measure with your official seal, why can't I sell potatoes by measure?" I will answer: "True, your measures comply with the specifications of the law, however, these measures were not sealed to measure potatoes, but were sealed to protect the buyer of other commodities that are to be sold by measure." For a specific instance we had on exhibition at the recent State fair two peck measures filled with potatoes. One was filled by measure and weighed only 12¾ pounds, the other was filled by weight it was heaped up high with potatoes and it barely weighed 15 pounds. So you can readily see that on 1 bushel of potatoes, when not weighed, the merchant gains 9 pounds to a bushel, or 21 pounds on a bag containing 2½ bushels, or 150 pounds, which is equivalent to nearly 1½ pecks of potatoes, or 25 cents in cash, when potatoes are selling at the rate of 65 cents per bushel. Another instance is the stacking of apples and peaches, which has confronted this department on several occasions. We have come in contact with merchants who will sell peaches in butter dishes. Now, a butter dish, when properly filled, should hold all the way from 12 to 15 peaches, but with the stacking process, which they use, they would have from 9 to 10 peaches in a dish, showing that the consumer was defrauded out of at least one-third of the commodity he was entitled to. We had many of these instances confront us during the different seasons, and it keeps our men on the alert constantly trying to eliminate this practice. With the hope of awakening a new spirit of responsibility on the part of both the merchant and the purchaser, and with the indorsement and cooperation of the Indianapolis Business Men's Association, which has the welfare of this community at heart, I respectfully recommended that this ordinance be introduced and passed by the city council of Indianapolis, to the effect that all dry commodities shall and must be weighed. This would eliminate the stacking of measures of which we have so much complaint.

REPORT OF THE SECRETARY, L. A. FISCHER, CHIEF, DIVISION OF WEIGHTS AND MEASURES, BUREAU OF STANDARDS.

Your secretary very much regrets that duties in connection with the Panama-Pacific International Exposition, at San Francisco, which could not be deferred or delegated, compelled him to be absent

from Washington at the time set for the conference. It has always been a great pleasure for him to meet with the delegates, and his inability to do so in this instance causes him keen disappointment.

At the last conference, the committee on tolerances and specifications was given authority to reword the tolerances and specifications without changing their meaning, and the committee promptly set about carrying out the instructions of the conference. After carefully studying the subject, the committee found it highly desirable and necessary to make amendments involving some changes in the meaning of the original tolerances and specifications. The committee, therefore, decided to make such changes as appeared to be clearly necessary and to submit them to the conference.

The consideration of this matter naturally delayed the report being sent to the printer. Moreover, considerable delay was experienced in getting the report through the Government Printing Office after it had left our hands.

It was found necessary, on account of the lack of available space, to dispense with the manufacturers' exhibit of weighing and measuring apparatus at the present conference. It is regretted that this is the case, because the exhibits, which have been a feature of the past two conferences, have been a great benefit to the delegates, and, at the same time, they have been of value to the manufacturers. It is not the intention, however, permanently to abandon these exhibits, but they will be held again as soon as it becomes practicable to do so.

A matter of a great deal of importance to this conference and one in which weights and measures officials and various associations and individuals who worked for its passage may justly feel proud is the act of March 4, 1915, establishing a standard barrel for fruits, vegetables and other dry commodities, and a standard barrel for cranberries. This is the first mandatory act establishing a standard for general use which has been passed by Congress under the authority conferred upon it by the Constitution of the United States. The weights and measures movement is greatly indebted to the introducer of this bill, Hon. William E. Tuttle, of New Jersey, for his untiring energy in its behalf, and also to Senator Weeks for his invaluable assistance in securing its passage through the Senate. While the act does not represent everything that could be desired, from the viewpoint of a weights and measures official, it is a forward step of vast importance to weights and measures work. As a paper is to be presented on this subject it is unnecessary for me to say anything further regarding it.

At no time in the history of the association has the need for its service been greater. Within the space of a few years there has grown up a widespread demand for weights and measures inspection, extending to practically every part of the country; and with this demand for inspection comes also the demand for proper laws and ordinances, tolerances, and specifications for apparatus, and the most approved methods of inspection. Since the number of inspectors employed now is greater than ever before, the need along these lines is greater. The annual conference on weights and measures is the natural gathering at which these matters should be discussed and matured conclusions reached. It is therefore important that the members of this conference should put forth their greatest efforts during this constructive period of the weights and measures move-

ment and make the actions taken at these early conferences combine experience, ripened thought, and sound judgment, so that they will stand the test of time and make efficient the departments adopting them and thus make sure the successful progress of this important work. It is to be presumed that any cause, however important and necessary to the welfare of the people it may be, is sure to meet with opposition and even to have enemies who seek to destroy it for personal ends. It is also a natural consequence that reaction to a greater or lesser extent should follow very rapid growth in any line of work; that such reactions have taken place in the past may be inferred from the provisions in the constitutions of Alabama, California, and Pennsylvania, which prohibited creation of any State office for the inspection or measuring of any merchandise, manufacture, or commodity, but this authority was reposed in the county and municipality. Happily this provision was stricken out of the California constitution by a referendum vote of the people.

At the recent sessions of the various State legislatures bills were introduced in several States having for their objects the abolishment of weights and measures inspection work, the transfer of the work to a subordinate position in some other department, such as agriculture or pure-food commissions, or the crippling of the work by providing inadequate appropriations. Bills of this kind were introduced in Minnesota, New York, Oregon, and Vermont. The general argument relied upon to assist the passage of all these bills was that of economy.

The bureau opposed the legislation in each case not because it is opposed to the agricultural or pure-food commissions but because it is believed that the weights-and-measures work is of such importance that it should not be subordinated to the work of any other department, but should be independent of them, and directly responsible to the chief executive. The bureau evinced its opposition by accepting invitation of the State officials to send a representative to appear before the legislative committees having these bills under consideration or by the preparation of arguments showing the inadvisability of such a transfer on account of the lessened efficiency. The proposed changes were also opposed on the ground that no economy would result from such a change. We are glad to say that every such attempt to weaken the departments was unsuccessful.

A bureau representative also appeared before the legislative committees in favor of a bill to establish a State department in New Hampshire.

Several States enacted excellent laws, which either inaugurated the work or supplemented laws already in force in the States. Notably among these may be mentioned California, Minnesota, Oklahoma, Oregon, Utah, and West Virginia.

Last fall, at the request of the superintendent of weights and measures of the State of California, a representative of this bureau visited that State and spent some time working in cooperation with him in putting the new State law into effect. At the same time the Sates of Minnesota, Montana, Washington, Oregon, Arizona, and Utah were visited and various matters of interest and importance were taken up.

During the year the bureau has been represented at State conferences in Massachusetts, Pennsylvania, Michigan, and New York.

The large amount of work necessary to successfully arrange a conference of this kind must be apparent to everyone present, and to do this with a clerical force which is inadequate to meet the everyday demands of the division to which the conference work falls is a task quite impossible of accomplishment without leaving some things undone which might well have been attended to. If anything of this nature affected anyone present, it is hoped allowance will be made. There were sent out letters aggregating hundreds of pages of typewriting, 2,800 circular letters, and the same number of printed announcements, besides replies to a large number of letters received from delegates and others concerned.

The CHAIRMAN. Gentlemen, you have heard the secretary's report; what is your pleasure?

Mr. ALBRECHT. Mr. Chairman, I move that the report of the Secretary be accepted.

(The motion was seconded and agreed to.)

(Thereupon, at 12.45 o'clock p. m., a recess was taken for luncheon.)

24309°—16——4

SECOND SESSION (AFTERNOON OF TUESDAY, MAY 25, 1915).

The conference reassembled at 2.30 o'clock p. m.

The CHAIRMAN. If we had known that the weather was going to be so pleasant I think we ought to have had an open-air meeting on the lawn. Since the meeting this morning I have learned that we have with us a gentleman from the internal-revenue department of the Philippines, who has the administration of the weights and measures laws, and I am going to task him to say a word or two to us as to what they are doing in the Philippines. I take pleasure in introducing Mr. James J. Rafferty.

REMARKS BY JAMES J. RAFFERTY, COLLECTOR OF INTERNAL REVENUE FOR THE PHILIPPINE ISLANDS.

Mr. Chairman and gentlemen of the conference, strictly speaking, I am not, as most of you seem to be, a weights and measures man. The bureau of internal revenue of the Philippine Islands, over which I have control, has charge, among many other things, of the weights and measures law and the enforcement of it. We have, perhaps, as good a law as any of you. We charge a small fee for sealing weights and measures. Every municipal treasurer is a sealer of weights and measures, and we have some 800 municipal treasurers. Every provincial treasurer is a representative of the collector of his Province, and we have 39 provincial treasurers who see that the municipal treasurers do their duty. The man who has a weight or a measure, or a woman, either—for the Filipino women are the real business people—is obliged to go to the treasurer at least once in each year to renew the license and the seals. We do not fix the time for sealing at the beginning of the year, but have it running so that business will not be congested. Out of that we gather in Manila alone ₱165,000, which divided by two will give you the number of dollars.

The enforcement of the law rests with the collector, who can do pretty nearly what he pleases. We, of course, can go to court, or we can compromise with the offenders. When the war struck us over there in August money was scarce, the foreign banks shut down, and the price of ordinary things of life soared skyward, and I thought it would be a good time to start in on a weights and measures campaign.

You gentlemen talk about the accuracy of the weights and measures. I want to tell you that all our weights and measures are quite accurate. We make such frequent inspections that the dealers do not get off on that line; but where they beat the public is in the manipulation of the measures, and, to conform to what the secretary said this morning, we think it is our business to protect the people from

that manipulation. For example, I gave a squad of men ₱30 each and told them to go out into the highways and byways and make actual purchases, having one man with them as a witness, a bystander if possible, and the many crooked tricks that we got onto was surprising, and also the many people who were cheating.

We found conditions so bad that I was afraid to tell the truth, because it meant the accusing and indicting of all the business people of Manila, and the collector could not afford to do that. Within a short time we arrested 180 persons. When I started the campaign I announced that I would not take fines or effect compromises, but said I was going to prosecute all the cases, but in a little while I had the courts blocked, and it took a great deal of my agents' time to wait on the cases; perhaps a case was postponed, and many other things annoyed us in the way of delays, and we felt we could devote our time more profitably to our regular work.

Another objection I found on going to court was this: We sell rice over there, for example, by a measure that is equal to about a peck. When you go into court and accuse a man of cheating a poor Filipino out of 10 per cent on a measure of rice there are very few judges so constituted as to realize that that is a serious offense. They sort of look at you with a sneer to think that you are in such a small business as to bring a man into court for a little thing like that, the person who had been cheated being one of our agents, or a bystander and the hateful bureau of internal revenue being behind the transaction, and they do not look favorably on tax collectors over there any more than elsewhere. Therefore I had to cancel my order to bring criminal prosecutions against these offenders, and I found a more speedy method of dealing with them in my own office. I have a law division, and these offenders were brought into the law division, and they were given their choice of paying a fine, which we imposed, or going to court. In that way I made a very nice business of it. The fines usually ranged about $25, and we had 180 in about six weeks. We did prosecute a few and got sentences against them.

As to this sleight-of-hand work I do not know whether you gentlemen have a right to deal with that question, but we have, and I will give you an example of how it works. There is nowhere, I think, where the old phrase, "We should do business open and aboveboard," applies more directly to any business than it does to the business of weighing and measuring merchandise. The storekeeper over in the Philippines has his cornucopia and he has his measure heaping full right before the customer's eyes, and he picks up his measure and pours the rice into the cornucopia. He has a hole in the bottom of the latter, however, which he can shut when he pleases and the purchaser thinks he is getting all that is coming to him. Again, he takes his square measure and takes his hand quickly like that, tilts it over, and he has a handful of rice, and 2 or 3 or 4 or 5 per cent on the whole amount is saved. The manipulations practiced on the scales also are many. I point out these two or three instances to show you that it is not enough to spend our time saying that we have accurate weights and measures. We must also protect the consumer from the effect of these manipulations. When we get through with this campaign we will take it up again, for I have practically unlimited money to be devoted to that. The

Government gives me an appropriation, with four or five hundred agents, and I have under my control 800 municipal treasurers and 39 provincial treasurers, all required to obey the orders of the internal-revenue agent.

When we got through the campaign, which we conducted all through the archipelago, in order not to lose its effect I had the reports of the agents and their experiences boiled down and run off into a circular, and had that printed in Spanish and English and given out to the newspapers. They were glad to get it, and in that way we did what we could to put the purchaser on guard against the man who was giving short weight.

I want to say to you gentlemen who have not any weights and measures law that I am surprised that any State would be so backward as not to have such a law. I regard it as being backward on the part of the State not to have representatives here at this conference, and I hope that the Bureau of Standards will continue its work. The bureau is doing good work in an able way, and I hope it will continue until the whole of the United States has either a Federal weights and measures law or every State in the Union has a proper weights and measures law. To you gentlemen who are seeking legislation I would recommend that you study the Philippine weights and measures law, and I recommend that you do as they have done there, put the enforcement in the hands of one man and arrange it so that he will not have to go to forty different courts in order to fight the cases. If a man is guilty, let the collector say, "We have the goods on you this time. Do you want to pay a fine, or shall we go to court and bring criminal prosecution?" That is the thing we do over there, and I do not think it could be improved upon. It may seem a little arbitrary to you over here, but we do not belong to you—sometimes we do and sometimes we do not. Sometimes the Constitution follows the flag, and sometimes the flag follows the Constitution. We do very much in some things, and we are held down in others. I thank you, Mr. Chairman.

The CHAIRMAN. It certainly sounds refreshing to hear that in some place they have unlimited means. Is there a delegate here from Hawaii or Porto Rico? I understand a delegate from Porto Rico is in town, and we will hear from him later.

The first paper on the program this afternoon is "Testing of electric meters," by Mr. H. B. Brooks, of the Bureau of Standards, and I want again to call your attention to the fact that the bureau will consider weights and measures in their broadest aspect, and you will continue to have on your program some of those things, lest you forget that weights and measures is something more than yardsticks and pounds.

TESTING OF ELECTRIC METERS, BY H. B. BROOKS, BUREAU OF STANDARDS.

I. INTRODUCTION.

The object of this paper is to give a general idea of the commercial measurement of electric energy, with a brief outline of the apparatus required and methods used in the testing of electric meters. We shall first consider what is to be measured and the units employed.

1. WHAT THE ELECTRIC METER MEASURES.

The gas supplied to a house is consumed and the products of combustion escape into the atmosphere. Electricity, however, is not consumed, but merely flows through the lamps or other appliances and passes back to the electric generator. The thing that is supplied by the electric company is the energy which the moving electricity possesses and which it will give up in the form of light, heat, or power when it is allowed to flow through a lamp, a heating device, or a motor. A simple illustration will make this clear. Suppose that a pump located in a central water supply station be operated so as to force water into pipes laid in the streets from which service pipes are run into buildings where power is needed. Assume that after the water has operated a water motor it is not allowed to run into the sewer but is taken back through a return pipe to the pump, which sends it out again. In other words, the same water is circulated continuously and gives up its energy by passing through a motor which can perform work. The customer of such a company would not be supplied with the water itself but with the energy (ability to do work) which the water possesses. In other words, he pays for the work of forcing the water through the pipes and the motor. This energy can not be measured simply by measuring the number of gallons which have passed through the customer's motor in a given time, because the energy depends also on the difference of pressure between the inlet and outlet of the motor. If the pressure varies from time to time, a correct "water-energy meter" would have to be so constructed as to take account of the rate of flow at any moment (in gallons per second) and also of the difference of pressure in pounds per square inch. If the pressure could be kept practically steady at all times, an ordinary water meter as now used would be sufficient, but its dials would have to be marked to read the energy of the water, not the quantity.

The case just described is very similar to the supply of electric energy, and, with the water illustration in mind, a table can be drawn up which will give an idea of the meaning of some of the commonly used electric units.

	Water.	Electricity.
Quantity is measured in	Gallons	Coulombs.[1]
Rate of flow is measured in	Gallons per second	Amperes.
Pressure is measured in	Pounds per square inch	Volts.
Rate of doing work (power) is measured in	Horsepower	Watts.
Energy is measured in	Horsepower hours	Watthours.

[1] The coulomb is not used in commercial work; it is included in this table for completeness. The word "ampere" is a single word which means "coulomb per second."

The units in which electric energy is measured commercially are the watthour and kilowatthour; the latter means simply 1,000 watthours. For example, the same amount of electrical energy may be spoken of as 56,000 watthours, or as 56 kilowatthours. To illustrate the approximate size of these units it may be stated that a 40-watt tungsten lamp will use 40 watthours of electrical energy per hour, or 1,000 watthours (equal to 1 kilowatthour) in 25 hours.

A 6-pound electric laundry iron, rated at 500 watts, will use a kilowatthour in about two hours if connected to the circuit during the whole of this time.

2. PRINCIPLE OF THE WATTHOUR METER.

Electric energy is measured (in this country) almost entirely by watthour meters.[1] A watthour meter is essentially a tiny electric motor driving a registering dial. The electric current used in the house flows through the motor. If only a single lamp is in use, the current is very small and the motor revolves very slowly. If more lamps are turned on, the current is greater, and the motor will revolve more rapidly. An action similar to this is familiar to everyone who rides on electric cars. When the motorman leaves the controller handle on the first notch, only a small current is allowed to flow, and the motors move the car very slowly. When the controller handle is on the second and higher notches, the current is greater and the motion more rapid. Another illustration is that of the electric fan, with a lever to vary its speed by varying the amount of current which flows through the motor.

3. ACCURACY OF THE WATTHOUR METER.

Generally speaking, the watthour meter is a commercially accurate measuring device. It requires cleaning at certain intervals, just as a watch does, and, like the watch, if neglected it usually tends to run slow. Under some circumstances a meter may be fast; that is, it may record in excess of the actual energy that has passed through it. Properly managed electric light companies do not want their meters to run either fast or slow, and they have a force of men whose work consists of testing, cleaning, and readjusting meters.

II. THE METERING OF ELECTRIC ENERGY.

The problem of metering electric energy is much more complicated than that of metering water or gas. Electric energy is supplied in various forms, which may be briefly outlined as follows:

Direct current, in which the flow of electricity is always in the same direction. This is analogous to the supply of water power in the illustration above mentioned.

Single-phase current, in which the flow of electricity reverses its direction, usually 25 or 60 double alternations per second, known as 25 and 60 cycle single phase a. c. current, respectively.

Polyphase current, which consists essentially of several single-phase currents which reverse their directions the same number of times per second, but which are out of step with each other by definite amounts. The two varieties of polyphase current which are employed in the supply of electric energy are the two-phase and three-phase systems. Of these two, the three-phase is by far the most widely used.

[1] These meters have in the past been called wattmeters, recording wattmeters, or integrating wattmeters. These terms are going out of use.

Other complications are, first, the number of wires in the circuit to be metered (two-wire and three-wire circuits are much used); second, the voltages between wires (110 and 220 volts are very much used); and third, the frequency of reversal, in the case of alternating-current meters. The two most commonly used frequencies in this country are 25 and 60 cycles (double alternations) per second.

Since all of the above features must be considered, not only in the construction of the meter, but in the arrangements for testing it, it may be realized that the subject is one requiring a great deal of space for its adequate treatment. In this connection, attention is called to the Electrical Meterman's Handbook, prepared in 1912 by the committee on meters of the National Electric Light Association. This book contains the most complete treatment of the subject which is available, and is the result of a great deal of cooperative work on the part of the principal electric power companies. A revised edition is now in preparation. The Bureau of Standards assisted in the work of revision.

III. TESTING OF WATTHOUR METERS.

In what follows, the attempt will be made to indicate briefly the apparatus and methods used in testing electric meters.

The equipment required for testing watthour meters varies greatly with the scope of the work, and also depends on the facility with which the testing apparatus used can be compared with standards of a higher order. In illustration of this latter point it may be said that a testing officer whose work is conveniently near a State university which maintains proper standards would be able to avoid the purchase and maintenance of some expensive apparatus in consequence. If the testing officer is at a remote point, these standards could not well be dispensed with if the proper accuracy and reliability is to be had in the work.

This bureau has collected data from public-service commissions concerning the apparatus used by them in the testing of electric meters. This information will appear in a forthcoming bureau circular entitled "Standards for Electric Service." Bureau circular No. 20, second edition, entitled "Electrical Measuring Instruments," contains a description of the equipment for testing electrical instruments.

The final standards in the measurement of electric power are the resistance standard and the standard cell. The former is made of a special alloy in the form of wire or strip, and is adjusted to have a definite resistance in terms of the international standard. The standard cell is simply a cell made of pure chemicals in such a way as to have a definite and constant voltage. These two standards are employed most readily by the use of a potentiometer, which in one form or another should be the master instrument for precision direct-current measurements.

To the preceding standards must be added a standard of time, which may be a chronometer or a suitably made clock.

The preceding standards are not needed in routine work, for which portable instruments of good design and construction are suitable, when checked at intervals against the master standards.

Three pricipal methods of testing watthour meters will now be briefly discussed.

1. INDICATING INSTRUMENT AND STOP-WATCH METHOD.

In testing a direct-current meter by this method, the current flowing through the meter is measured with an ammeter, the voltage is determined with a voltmeter, and a stop watch is used to determine the number of seconds in which the meter disk makes a given number of revolutions. This method requires two observers, and the accuracy of the test depends on the three measured values, namely, of current, voltage, and time. This method can only be properly used when the current and voltage are fairly steady. The testing of an alternating-current meter differs from the above in using a wattmeter in place of the voltmeter and ammeter.

2. CALIBRATED-RESISTANCE METHOD.

This method makes use of a resistance adjusted to absorb a definite amount of power at a given voltage, and a stop watch. As an exact value of voltage can not be maintained at the consumer's meter, the method also requires a voltmeter which allows the actual power to be calculated for any given case. With properly made resistances this method may be used equally well on direct current and on alternating current.

3. THE PORTABLE WATTHOUR METER METHOD.

This method, also called the "rotating standard method," consists in the use of a portable watthour meter which may be connected in circuit with the consumer's meter. It is illustrated by the apparatus on the table. This is the most convenient method and is widely used. Portable direct-current watthour meters are less reliable than portable alternating-current watthour meters, and require more precautions in their use to obtain good results.

IV. CONCLUSION.

The Bureau of Standards hopes to be able to make a careful study of methods and equipment for meter testing, in order to put the information so obtained at the disposal of public officials whose duties include the testing of electric meters.

DISCUSSION.

The CHAIRMAN. Do you gentlemen desire to ask any questions of Mr. Brooks? I will state in this connection that the bureau, in order to help along the educational feature of this work, has in preparation a circular on "Measurements for the Household," which will cover all of the weights and measures which enter into the common affairs of everyday life, just the simple A B C's, and which is written more from the standpoint of the householder than from the standpoint of the sealer. We felt that we should do something to educate the public

along those lines, and the more we do of that the easier your work will be.

Mr. AUSTIN. I would like to ask Mr. Brooks if one of those instruments for testing the meter is suitable for testing the accuracy of all the ordinary service meters in use?

Mr. BROOKS. No; because we must have an alternating test meter for alternating service and also a direct-current test meter for a direct-current service meter. The matter is also further complicated by the fact that the currents range all the way from 3 amperes to 1,000 amperes, and the voltage also varies. The size and weight of the test meter has recently been cut to one-half, and the newer ones are much more convenient to use.

Mr. MARONEY. Mr. Brooks, assuming a series of lamps, one of 60 watts, one of 40, and one of 80, making a total of 180 watts, should the meter show 180 watts run per hour? Would that be a fair test of that meter as to accuracy?

Mr. BROOKS. That would only be an approximate test. In our circular we are describing that method for the householder who is convinced that his meter is running twice as fast as it should, for instance. A 25-watt Mazda lamp may run from 23 to 27, since it is impossible to make a lamp exactly 25, and a certain range is marked 25 watts, but if you turn on a number of lamps and let them run for several hours, your meter should indicate the number of watthours equal to the product of the watts and the hours, and it will give you the means of determining whether your meter is within, say, 5 per cent of accuracy.

Mr. BARNARD. Did I understand you to say that the bureau was preparing a circular that would embody these various tests?

The CHAIRMAN. Not so much the various tests, but it does embody the simple tests for the purpose of educating the householder as to what to expect. In other words, if these circulars go into a district where there is no sealer of weights and measures, I think the householder will be sure to call attention to that fact, because we help them in many instances to go to the local officials.

Mr. BARNARD. In my city the ordinance requires that the sealer of weights and measures shall test all meters, and I have not been able to get hold of any system of testing electric meters without going to considerable expense in getting apparatus, and I was therefore in hope that I could get some information here that would tell me where I could employ some simple method without going to large expense.

The CHAIRMAN. Get in touch with Mr. Brooks and his department and he will tell you. It would be a very expensive proposition if you had no central place to go to. What is the expense of one of these, Mr. Brooks?

Mr. BROOKS. Possibly, about $35.

The CHAIRMAN. How many would be needed to cover the ordinary range of alternating and direct current?

Mr. BROOKS. Two or three or four meters, perhaps.

The CHAIRMAN. There is no reason why the bureau should not help you in these matters—any of you who find yourselves in position of doing that work. The bureau will always be pleased to advise you and take charge of the matter until you have in your State a central

place for doing that. It is just as important as other weights and measures matters.

REPORT OF COMMITTEE ON CONSTITUTION AND BY-LAWS, PRESENTED BY JOHN H. SHERMAN.

I want to state that Mr. Hand and I have been in rather a difficult position in that the chairman of this committee did not appear. Mr. Hand was a member from the beginning but was not chairman, and I was not a member from the beginning, but came in when the chairman and another member got out. Mr. Hand, as chairman of the committee, has asked me to present the constitution. As you know, the constitution in its bulk was accepted last year, but there were some sections left vacant and we have simply tried to complete the job, and here and there we have had to make modifications which we wish to present to the conference. Where we have added matter or made modifications I will call attention to the fact.

I will read the constitution, which is as follows:

Article I.

This association shall be known as the National Association of Weights and Measures Officials of the United States.

Article II.

The objects of this association shall be, first, to promote interest and harmony in the departments of weights and measures of the various cities and States of the United States; second, to hold conferences from time to time for mutual exchange of views on matters of importance to the officials; third, to secure Federal legislation and uniform State legislation throughout the United States; fourth, for the advancement of the work of the National, State, and city departments of the United States, and for social intercourse of its members.

I think the custom is to pass on a matter of this kind article by article.

Mr. Farrell. Mr. Chairman, I suggest that Mr. Sherman read the constitution straight through.

The Chairman. We will proceed in that way.

Mr. Sherman. The next article is No. III, and this is provided in order to restore, to some degree, the official character of the conference which it had at the start and has not recently had.

Article III.

Section 1. The membership of this association shall be classified as "members, senior members, and honorary members."

Sec. 2. Members shall be persons (except as provided in section 3 following) who are actively engaged in the enforcement of weights and measures legislation in Federal, State, county, or city employ or actively engaged in research or other work subsidiary to or necessitated by weights and measures legislation. They shall have full privileges of the floor in all regular meetings of the association, may take part in all discussions, serve on committees, and shall vote on all questions, except as provided in section 3 following.

Sec. 3. Senior members shall be chief executives (by whatever title designated) of Federal or State departments of weights and measures or their representatives or chiefs of departments or their representatives in cities having populations of 300,000 or over at the most recent United States census. They shall have all the privileges of members and shall have the sole vote on questions of tolerances, specifications, and matters of future Federal or State legislation.

Your committee believes that a city of 300,000 persons presents as many manifold difficulties to the sealer as the small rural State presents. We therefore believe that such men should be on a par with the State men, and we believe that the State men and these men should be differentiated from those who are merely inspectors in larger departments.

The power to vote on these two questions is limited to the senior members. That, as you wlil see, extends the present limit, for, you know, on important questions in the past it has been customary to rule that each State votes as a unit.

Section 4 reads as follows:

SEC. 4. Honorary members shall be persons who, by virtue of service rendered in the advancement of weights and measures legislation or in the improvement of weights and measures work or in long and faithful service in the practical fields of weights and measures work, have earned this mark of respect from the association. They shall be elected by a two-thirds vote of the entire association and be approved by a majority of the senior members. They shall have all the privileges of the floor and may serve on committees, but shall have no vote and can not hold office.

That is to provide for men who have done good work and have retired for one reason or another. As you know, we have several among us every year who are exceedingly valuable to the conference, whose advice we would not want to be without, but who ought not to vote.

The CHAIRMAN. That is rather an important article, and I think we should take the sections up one by one. As to the first section, defining the membership, is there any objection to that? I refer to the classification into members, senior members, and honorary members.

Mr. GODDU. What is the idea of having members and senior members? Why not all members?

Mr. SHERMAN. Because in that case it is perfectly possible for a number of small town and county sealers, whose State already has a vote according to the original rules of this conference, to turn up in the meeting and put over anything they please over the heads of all the State men assembled. The far-distant States can only send one or two delegates. If we throw this membership wide open and have no differentiation whatever, it means one of two things, either that the eastern delegates, no matter how small the territory they represent, can vote down the western men and ultimately kill the conference, or else the chair would be forced, on matters of importance, to fall back on the old ruling we had when the conference first started of giving only one vote to each State, in which case cities like New York, Chicago, Boston, and St. Louis, and other large cities, where the problems are just as difficult as in any State, would be entirely shut out. The committee thinks that would be unjust. This seems to be the only way to solve the problem.

Mr. BARNARD. Mr. Chairman, it seems to me that this section is establishing aristocracy in this session, and that is something we want to overcome. I do not know of any reason why a sealer from a town of 30,000, or possibly 10,000 or 15,000, is not just as much interested in the specifications and tolerances of this organization as a man who happens to represent a city of 300,000 or 400,000. I think that is absolutely uncalled for.

Mr. FARRELL. This is along the same line. Although representing a large eastern State, I feel, for instance, that the sealer of the city of Buffalo, the sealer of the city of Rochester, the commissioner of the great city of New York, should have just as many votes as the State of New York. He is just as important in his own bailiwick as the State superintendent of the State of New York. We have with us to-day some 15 or 16 men from the State of New York—county and city men. Some of those gentlemen represent counties with 200,000 or 300,000 inhabitants. They are really entitled to a vote and should be given the same power as the State superintendent, if they represent directly the people in their own county, rather than the State superintendent, who represents the State as a whole.

Mr. HOWELL. Mr. Chairman, I want to say it does not occur to me that this is a question of aristocracy, but it seems to me equitable and right. I come from the West, and I am almost the only representative from the far West. I presume there is one city in my State that could also be represented, but we do not want to come back here 3,000 or 4,000 miles and have a lot of sealers from small towns put something over on us. We want to have an equitable vote, and I think the section is proper.

Mr. FITZGERALD. You might just as well say the two Senators from the State of Rhode Island should not be allowed to come down here and vote. While they represent the smallest State in the Union, they have just as large a vote in national legislation as the two Senators from the State of New York. Therefore, I think, gentlemen, every man connected with a department should have a voice on the floor with regard to legislation.

Mr. DOWNING. I do not think the analogy that has just been made is fair. Aside from the Senators coming from the various States, we also have the Representatives, who are selected on the basis of population. It seems to me, as a Representative from the Central West, that the only fair proposition for voting is that which has been proposed. This should not be a sectional meeting; this is a national meeting; and if you are going to allow every sealer from every township, from every county, from every small city, to come here and vote, this organization is going to break up. In the interest of the organization I believe the only fair method is the method which has been proposed.

Mr. BRENNAN. Mr. Chairman, I like the method which has been proposed. We of New Hampshire, a little State, can have one delegate here. Cities far away, of three or four hundred thousand, are not so apt to send delegates down here, perhaps, as those who are near at hand, but if we should give a delegate of the city powers, say in any amount that you please, you would have a crowd right around here that could control this conference. We, farther away, would not have any representation that would amount to anything, so far as the vote is concerned. The States of New Hampshire and Washington might send but one or two. If this conference was held in that section, there would be a whole crowd in that section which would attend. If you extend the privileges and have them referred to a smaller population, then the control of this conference will be in this section around here, within a few hundred miles of Washington. It will be very, very unfair and, to my mind, will be most serious. If you open up this vote to delegates, no matter how small

the population they represent, then the conference will be controlled by men in this immediate vicinity, and those larger sections of the United States will not be represented. I think this would be fatal.

Mr. Goddu. As I started the ball rolling, Mr. Chairman, I would ask to say a few more words. It seems to me those in favor of this proposition are all State officials, those who are entitled to vote. Did you ever stop and think that if this was adopted the small sealers would have to keep away?

The Chairman. I think you are laboring under a misapprehension.

Mr. Goddu. I am not. I am not afraid of who is going to control the conference, but if I have not a vote I will not come here, and there are a good many in my position who will not come if they can not vote. We will read the report when it comes to us.

Mr. Sherman. I think a great deal of misunderstanding can be cleared up, for it becomes perfectly apparent that the section has been misunderstood. I want to call your attention to the fact that this section is drafted to make the meeting more democratic. At present the only men with a standing in this convention are State men. Last year, on two occasions, the line was sharply drawn, and each State had a vote. That is the first thing that happened when a closely debated question came up—the chair was called on to rule who has a vote, and he had to go back to the original status and put in only the State men. Now, your committee holds that it is unjust to leave a situation open which automatically throws out, on every question of importance, such cities as New York, Chicago, Cleveland, and Boston—large cities where the difficulties are very great. On the other hand, if you will look back you will find that the people who will become members have in the past had no standing here; they have come as visitors or delegates from small jurisdictions, and on any important matter they were not considered. The only thing that this bars the representative of the small jurisdiction from is two things—tolerances and specifications, which are matters for the State or large jurisdictions, and future State or Federal legislation; those two questions only. Those questions have never been voted on in the past by the persons whom we proposed to put in as members. In other words, this is a section to do away with the oligarchy and make this more democratic.

Mr. Richardson. Mr. Chairman, my impression was, when I first attended this conference, that it was to be composed entirely of State superintendents of weights and measures, and, so far as my State is concerned, they would prefer to have it that way. Our city and county sealers are perfectly willing to have their State superintendent of weights and measures look after any legislation that may arise here. As these brethren have said, if we take in all the city and county sealers in this country wherever we hold the conferences, whether here or in Richmond or over in Chicago, the local men will control the meetings.

Mr. Maroney. Assuming that the reading clerk reads this as a motion, I offer an amendment, sir, that all weights-and-measures officials in towns, cities, and States have a right to vote at this convention.

(The above amendment was seconded.)

The Chairman. You have heard the motion, which has been seconded.

Mr. STARN. Mr. Chairman, in the State of New Jersey all proposed legislation, whether it be National or State, is taken up in our home organization. We regard our State superintendent as the man to care for our interests, as representative of the public of the State of New Jersey. We propose that he shall attend this national conference and take care of the interest of the people of New Jersey, and he is our representative. In him we have confidence. As one of his men, if I desire to come here, I presume that it is my privilege, whether I come as an official or whether I come as a citizen; but under all circumstances and under all conditions I come here subject to the organization of our State, under the representation of Mr. Waldron, for whom we have the highest regard and whom we are absolutely willing to trust to represent us.

Mr. GOODWIN. Mr. Chairman, I believe that the gentleman from New Jersey has struck the right note. I do not believe we would make any progress whatever under Mr. Maroney's motion. I think we would be going to sea without any oars. I do not believe it would be possible for us to exist under those circumstances. Rhode Island has a State organization. It is not very active, but all questions of interest and all questions of law that they want to have promulgated are generally submitted to the State sealer of weights and measures, and I confer with them and we decide on the proper procedure, and I introduce the bill. It would be just like a State organization going in to do that same service as a whole. We could not get results under the circumstances. Therefore I hope the motion will not prevail.

Mr. SHARP. Mr. Chairman, I would like to ask the chairman of the committee how he construes, in section 3, the words "Chief executive of Federal or State departments." The reason I ask is this: We represent a city of one and three-quarter millions, and there has been a law just passed by the State legislature in which the supervision of our city is not included within the chief of the bureau of standards at Harrisburg, so that it leaves us a sort of free lance in our State. We have 3 departments in our bureau and 35 inspectors.

Mr. SHERMAN. Under the wording of this section the State of Pennsylvania would have a State delegate, Philadelphia would have one delegate, and Pittsburgh one delegate. I do not believe there are any other cities in that State of 300,000 or over. The man who represents Pittsburgh and the man who represents Philadelphia would each have one vote on all questions. Other Philadelphia men, as members, can take part in all discussions and can serve on committees, and they may vote on all questions except tolerances and specifications or State and national legislation.

Mr. BARNARD. Gentlemen, this organization is gotten together in order to try to make uniform the specifications and tolerances all over this country. If you eliminate the sealers from the smaller towns who are coming here you are going to do this as I foresee it. Each State in the western part of this country that would possibly have one representaive here is going to meet in their own organization, and if they feel that their opportunities and their privileges have not been considered properly they are going to meet and form their own specifications and their own tolerances, and they are going to absolutetly disregard the national specifications and tolerances, I

believe, and I think that is something we have to take into consideration. I know in the State of Michigan there is quite a feeling at the present time that Michigan is not being properly considered, and we hope we can overcome that feeling; but if this motion that our friend from New Haven just made is lost it simply is going to mean that Michigan, for instance, is going to formulate her own specifications and regulations in spite of what we have been trying to do to overcome that.

Mr. STARN. I somewhat agree with the gentleman from Battle Creek. I live adjacent to Philadelphia and I know something of it, and I believe and am willing to admit that their chief, as represented by Mr. Sharp, should occupy the same position in this convention as the State superintendent; that that same condition should apply to every large city wherein the State law makes the same provision to which Mr. Sharp referred. I did not refer to our high regard for Mr. Waldron from any personal point of view whatever—that is a matter for every State. In regard to the small towns referred to by our friend from Battle Creek, we had the identical condition in New Jersey, but I endeavored to make clear in my remarks how we handled that condition and that is why I spoke of our absolute confidence in our State superintendent, for whom I say we have such high regard. We settle those matters in our State organization. Those small towns are just as carefully considered and just as seriously looked after as the city of Camden, which is my home—a city of over 100,000 people. So I think that the heads of the departments of the large cities referred to should occupy the same position in this national conference as the State superintendents.

Mr. SHERMAN. Mr. Chairman, the gentleman who offered this amendment seems to have overlooked the fact that this section is offered to extend the privileges of the county and small town sealers. Under this section, if it passes, they are going to have more privileges and a wider range of activities than they have had before, and it also extends the membership of the so-called senior members who now consist of one representative from each State, since that membership will in the future consist of one representative from each State and each city of 300,000 and over. That limit is chosen because we have to draw a limit somewhere. The reference to the possibility of the small town and county sealers forming their own convention and making their own policies in such cases seems to me to be very amusing. If they are going to do it in the future, under better privileges than they have had in the past, why in the world did they not do it in the past when they had less privileges than we propose to give them?

In the second place, it seems to me if any State or local convention of town and county sealers got together to pass new regulations, new policies, and specifications at variance with those selected by their State representatives in conference, and if the State representative proved in any wise unable to cope with that situation, the governor of the State in question and the legislature of that State would probably see to it in short order that they got a new State representative. I do not think that we need to fear that sort of thing at all, but I think it is time we settled down a little and see what we are working for.

Mr. MARONEY. Mr. Chairman, my idea of placing this matter before this conference is this: I realize what Mr. Sherman has there, and it has probably been overlooked by the committee. The average sealer of weights and measures is permanently on his job and your State official is not. We have been coming here for a number of years and we ought to realize that. Also bear in mind the fact that the man who comes in as a State official has no permanency against the local sealer, and if experience and continuation in office amounts to anything, then I would rather have the man who has had the experience come here and let us hear from him and give us the experience that he has got, than to hear from the State officials, in some cases.

You stipulate a town of less than 300,000 population will have no vote. I want to tell you, gentlemen, that in my experience for 13 years I have seen some sealers from a town of three or four thousand, perhaps, who have just as much intelligence as the man who represented a big State, and I, for one, although I represent a city of about 160,000 population, am not ready to have a conservator over me to tell me what I shall do.

Mr. GODDU. I want to know if there is a motion before the house?

The CHAIRMAN. We are speaking to Mr. Maroney's motion.

Mr. GODDU. I want to know who has a right to vote on that?

The CHAIRMAN. State delegates.

Mr. GODDU. I would like to explain my position. I would not have said a word here if I had known it before. I was invited here, and I thought I had a right to vote. If I had known what I know now I would have kept my mouth shut.

The CHAIRMAN. We are very glad that you did not understand it, because it was the purpose to have a free and open discussion of this. Certainly everyone may be heard.

Mr. FARRELL. I was under the impression we were here under the invitation of some sort of society that was in the air. I think the representative of every city and county who was invited to come here is entitled to a vote on any question until these by-laws and this constitution are accepted. The work that we have been doing and the rules that we have been working under have not been, so far as I know, ever adopted by any society or ever adopted by any association, but it has merely been the consensus of opinion of those who happened to be the executive officers of the meeting at that particular time. I suggest, therefore, if necessary, that the motion be laid aside for the moment and permission be given me to move that the rules, if there be such, be laid aside, and that everyone who was invited to come here be allowed to vote on this constitution.

The CHAIRMAN. I do not see how we could do that. The bureau feels somewhat under obligation to this meeting, in a way. If you will permit me, I will say now what I wanted to say later. The bureau felt in the beginning that it should not go too far into such matters, that it should not interfere with your State matters, that it should, in part, encourage and try to bring about State organization.

So, from the beginning, the meeting has been solely that of State representatives. Along toward the third or fourth meeting a great many of the important sealers asked to come in, and we were very glad to have them. That question was brought up a long time ago,

so the local sealer has always been welcome, and we have gained a great deal from them and they got a good deal from us, and it was felt they should be here and we should have the privilege of meeting one another.

As I have said before, we have always gone on the lines of a national organization, an organization of the State officials. I attend almost every year some sort of an international conference, it may be on weights and measures, electricity, or what not. The method of procedure in those conventions is always the one we have adopted here. A country might have 40 delegates at one conference, yet it always has one vote. I do not see how this could be handled on any other basis if we are going to look forward to the national organization as binding together the State organizations.

It is no reflection whatever upon the local official in the State, because his chief comes to the conference with his sentiment voiced. I assume that within the next 10 or 15 years that this meeting, if we are to include anybody, will reach a thousand or more. It is going to be very large, indeed, and that question is going to come up all the time. However, it was felt, on the part of a good many here, and I do not oppose it at all, that some of the city officials ought to be admitted, but we ought to draw the line somewhere. Where that line shall be drawn, I am not committed. I am not speaking as your chairman, but just as a member, and therefore I feel we ought to consider this question very carefully, indeed, and no matter what is proposed, it is in no way a reflection on any one, but rather an attempt on the part of the committee to see to it that we do not interfere with State affairs. The reason why they are invited to come here is that they can express themselves and meet people from other States. There will be a great deal of educational work and sentiment toward uniformity but, after all, this association can not enforce uniformity. The State officials getting together can agree among themselves to do certain things, so far as their laws permit. That is one thing the bureau is very careful about.

As I have said this morning, we try to assist the States when they ask it, but we are very prone to keep out of the States unless they ask for our assistance. We are glad to see a first-class State organization, and our idea was to have an organization made up of State organizations. This was all done before we had any individuals in mind at all and we are perfectly unbiased in that judgment.

Mr. Lincoln. Now, Mr. Chairman, I think that that is a move in the right direction. I believe every man is here for the good of the weights and measures work; he has to enforce the laws; he wants good laws; he wants good specifications; and just as the gentleman spoke here, many of the local sealers have been here for a good many years. They have all of the problems that the State and big city men have to deal with, they have the good of weights and measures at heart, and they want to have good weights and measures laws, as I stated before. I do not believe any man in this conference, or any set of men is going to come in here for the purpose of doing something that will hurt weights and measures work. These men have been in the business of weights and measures for years; they are very progressive; they come here for this purpose; and I think

every man here should have a vote. I believe in everybody having a say, and I want these other gentlemen taken in here.

Mr. SHERMAN. There seems to be a continual misunderstanding as to the meaning of this section—this section providing for members as distinguished from senior members—which does give every county or small town sealer a voice on the floor on any subject whatever, a chance to serve on any committee whatever, and a chance to vote on any question whatever except two questions, and they are questions which, from the very beginning of this conference, have always been settled solely on the vote of the State men. We are now proposing to let in the larger city men. That is the first step toward broadening out. Possibly the small town and county sealers will show themselves so capable during the next year or two that the men who now have the vote—the State men—will be glad to introduce them into full senior membership. However, your committee has sounded out the State men; your committee has been careful to sound out State men who have been the oldest and the longest in the work; your committee has asked men who are traveling into sections where members of your committee have not been within the last year, to sound out and find out what their feeling was. The feeling seems to be that the best action, the best good would be secured by widening the limit a little bit but not throwing the bars altogether down as yet. I want to add, also, that if this amendment which has been proposed goes through, I could easily, next year, turn up here with enough men from within a radius of 300 miles or less, not one of whom has ever attended this conference, and swing through any motion I want to make. That could be easily done.

A DELEGATE. Mr. Chairman, I am a county sealer and I do not like the reflection that is being placed on us. I believe the county sealers would do everything they could to advance the interest in the weights and measures law.

Mr. WILLETT. I call for the previous question. I think we have discussed this long enough.

Mr. GODDU. I ask if the motion to amend is in order?

The CHAIRMAN. I think so; yes.

Mr. GODDU. Is the introducer a State delegate?

The CHAIRMAN. No; he has no vote.

Mr. EGAN. Is the motion to amend in order? I suppose it is, but the gentleman who offered the amendment has not a right to vote upon it. Is that the situation?

The CHAIRMAN. I have recognized him as making the motion in order to get the matter before the house, but the vote will be by the State delegates.

Mr. EGAN. And I suppose I have a vote on this question?

The CHAIRMAN. Yes, sir.

Mr. EGAN. I do not like the discrimination against the county sealers. I do not know, inasmuch as this question has been opened up, just where you are going to draw the line. I take it for granted that there are a great many sealers in this conference who are as well qualified to pass upon questions that come up as a matter of government and good procedure, who come from cities of 100,000 and 150,000, who are just as duly accredited delegates here as the State delegate is, and the longer I talk upon the subject, the more confused, probably, I will get. However, I know what I believe in and that

is this: I want to act fairly with the best interest of the weights and measures work throughout the country at heart and in mind. That is what I want to do. But, it seems to me we are wasting time, inasmuch as the State delegates are the only ones who can decide it. I shall vote against the motion to amend because I think we can find a better way out of it. I do not believe that the solution offered by that motion will be a satisfactory one.

The CHAIRMAN. I think there has been considerable misunderstanding, and I am very sorry to hear anything in the way of an inference that there is any drawing of the line or any reflection of lack of confidence on the part of the city or county sealers. While I had nothing to do with the drawing up if this, I can see that the committee had in mind the practical working out of a scheme for the future. Some of the most valuable work must come through the smaller sealers, and, in fact, in my work, I get some of the best suggestions from the office boy, but we do not take the office boy into our council. Mr. Fischer has a dozen good men about him and they work together, they work as a unit, and Mr. Fischer represents the sentiment in that section, and how else could we do it? This does not mean at all that this conference throws out the minor official, but it prefers to represent the State as a unit, which is what is usually done, and what we have always done in the past, except in discussions. In this particular case we recognize Mr. Maroney's motion, which amounts to precisely the same thing.

Mr. ALBRECHT. Mr. Chairman, I can not see where the county or the smaller city sealers can say that there is any discrimination whatever against them. Take the western States, for instance, Ohio and Indiana, while we are represented here from Ohio by 5 members, New York and New Jersey, close by, come in with probably 25 or 30 members. It does not give us a fair chance. If I had this organization over in Ohio and could take the 120 sealers that we have there, I could put over anything that I wanted to put over, regardless of who came out from anywhere else, and it is the same proposition here. I think if every State and larger city is entitled to one vote that is perfectly fair, and I believe the amendment made by Mr. Maroney ought to be voted down.

Mr. BRENNAN. Mr Chairman, I think we are somewhat at sea in this matter. So far as ability is concerned, we recognize that in the smaller men. I am a delegate from New Hampshire, but I will take off my hat to a whole crowd of sealers in little towns in our State, who know more about this matter of weights and measure than I do, they are more competent to act, and more competent to instruct in such affairs as that. But, I think, if you open this vote to everyone who comes here, it will be the greatest mistake that this organization ever could make. It would make it an organization without any character. If you come to our little State of New Hampshire with your conference, I will guarantee that in our little State of New Hampshire we can run the conference if you come. We can do it for we have enough in our State to just do that thing. Now, what does it mean? It means every man here—these gentlemen who represent little constituents—who have more ability than I have, have a right to do everything with the exception of voting on these matters of tolerances and future State and Federal legislation—simply those two things. Why should that be delegated to

this crowd that can be brought in here—these two great questions? Why should not our State of New Hampshire, as well as the State of New York, have a vote on that, and why should it be controlled by a little section around here? We have a lot of men here whom we want to hear from, and who would not be in the senior class as I would be, who know more about weights and measures than I do and who could tell you more, but, unfortunately, perhaps, for my State, I have been sent here to vote. I listen to what these men say, and I vote for New Hampshire. I think if you cut loose from that idea you will put this conference in a very bad position.

Mr. Barnard. I do not appreciate or like the inference that has been given by several men that they can come down here with a certain lot of men and control this conference. I would like to see the one man who could control my vote unless he could show me conclusively that he was right. I believe that the majority of the city sealers in this country are conscientious men, they come to the convention with their own convictions, and, if it can be shown conclusively that they are wrong, they will vote with the man that can show them the right. I believe they are going to vote according to the dictates of their own heart and conscience, and I believe that these inferences are wrong, if you please.

Mr. Starn. Mr. Chairman, I would like to put myself right at last. An opinion seems to have gone out that reflection has been cast upon some of the small sealers. I want to say for the benefit of this association that I meet all of you gentlemen with pride, you are a band of intellectual men, and I challenge any man here to show me anywhere in my remarks, if they can, where a reflection has been cast upon the smaller sealers by me. I am one of the small sealers, and I know something about the higher court of etiquette, and I would not incriminate myself. We hold our State conventions, and we are regularly organized. I do not care what question arises from a national standpoint, that question can be settled in our State organization.

I want it understood, gentlemen, right here, that while I have been throughout my life a man who has attended conventions, both political and otherwise, and to the gentleman from Battle Creek I want to say that the man does not live who can say he ever controlled or influenced my vote. To avoid long-drawn-out arguments I have tried to be so plain that I could not be misunderstood. In New Jersey we, in our organization, discuss all these questions and then and there settle the question. We then send our State superintendent here under instructions, and so, likewise, with every other State superintendent. Our State superintendent comes here under instructions and every State superintendent throughout this land would come likewise cheerfully. The argument, to my mind, is a waste of time.

Mr. Van Duyn. Mr. Chairman, I presume I am as democratic as any other one member sitting in this conference to-day; but it does seem to me that the question that we have up for discussion to-day is one of importance. As has been stated by a number who have spoken here to-day, we have our State organization, we have our State conference, we have given to all men who are working along the line of weights and measures a chance to come here and take part in this meeting; they can have the floor and have a voice in all the

deliberations of this meeting, a vote on every question except that of State legislation and of tolerances and specifications.

Now, gentlemen, can you not get together in your State organizations and can you not have your understanding as to what you want in the way of laws and of tolerances and specifications, and can not you come with your State representatives and show us State men we are wrong, if we are wrong, and bring this out in such a way before this convention that these State men, if they do not know how to vote, can, by your assistance, have these facts laid so plainly before us that we will vote intelligently before leaving this convention?

My remarks on this question are very rambling, because I did not have an opporunity to make a study of this question as it has been presented by the committee, but I am heartily in favor of the committee's report, and would not be in favor of throwing this open to any man who might come to the convention.

Mr. FARRELL. Under the constitution as proposed, would Mr. Fischer, Mr. Connors, and Mr. Downing be allowed to vote?

The CHAIRMAN. Under the constitution I suppose Mr. Fischer, Mr. Downing, and Mr. Connors would all be eligible to serve on committees, but Mr. Fischer and Mr. Downing would be the only ones eligible to vote on these questions.

Mr. FARRELL. Would Mr. Fischer be able to vote on that question?

The CHAIRMAN. He is Chief of the Division of Weights and Measures of the Federal Department and under the provision made he would be a senior member, being a chief of a Federal division.

Mr. FARRELL. Would Mr. Connors be allowed to vote?

The CHAIRMAN. He would not. He might be an honorary member, just as Dr. Reichmann from your State might be. If Dr. Reichmann and Mr. Connors are elected by a two-thirds vote of the convention they, after being elected, would be free to discuss any question on the floor or serve on any committee and have all privileges except voting.

Mr. EGAN. Mr. Chairman, I want to say, by way of explanation, that in the use of the word "discrimination" probably I was unhappy in the choice of the word. I did not intend that that should apply to the action of the committee on this subject. I recognize the force of the chairman's argument in behalf of State delegates to decide questions where the law of the States is concerned or where the specifications or tolerances come up to be voted upon. I think it would be better if the decision was left solely to the State delegates. The whole question raised is as to taking the delegates from cities of 300,000 and over. In view of all that has been said here this morning, I think that the settlement of these questions should be left to a vote by the State delegates.

Mr. GOODWIN. I would like to ask Mr. Maroney if the section referring to the cities of 300,000 were stricken from the constitution, if it would satisfy him? I think that that is practically the bone of contention here. I do not know why a city which happens to have 300,000 inhabitants should have any more privileges than a smaller city. I think it is a dangerous precedent to establish in this constitution. I would rather see that eliminated entirely and leave the matter strictly in the hands of the delegates appointed to represent the State at this conference.

I want to be liberal in this matter, and last year I tried to induce the city sealer of Providence, R. I., to represent the State. I could have gotten him appointed as a delegate and he would have represented the State, and he was more able than I on the subject, since he is a sealer of long standing and a very capable man. But he thought the State sealer, the head of the organization, should be the man chosen by the governor to represent the State. I tried also to get him this year to take my place, which I could have done, probably, by talking to the governor, but he still insisted that the head of the organization should represent the State in the conference here. Therefore, I hope that the city representation will be stricken from the section we are about to enact.

Mr. Maroney. The gentleman has asked a question, and, with your permission, I will answer it, Mr. Chairman. The gentleman asked if it would be satisfactory to eliminate all city sealers and leave the voting up to the States. In answer to that question I would like to ask if the gentleman knows that between New York and Boston there is not one city with 300,000 population, and from New York to Chicago I do not believe there are four with that large population. On the other hand, if this is going to be an incorporation by the States, on questions of policy, then hold a convention of State officers. If this is going to be a convention of sealers of weights and measures, as your constitution provides and your circular invites us, I do not want to come here, participate in part of the questions, and be disfranchised on any vote that comes up. Without being egotistical, I think I am as capable of voting on some of the questions as some of the State officers who have not been in office over a year. I ask that the motion be put.

Mr. Sherman. I am a State man. What is my State? The District of Columbia, with 360,000 inhabitants. Should I come in here as a State man, as I have in the past, with the privilege of voting on this measure, and the representative of New York City, with 4,000,000 inhabitants, not have a vote? Now, then, we carry that back; if New York can come in, why not Chicago; if Chicago, why not Philadelphia; if Philadelphia, why not St. Louis; and why not Boston, Cleveland, and so on. Somewhere you have to draw the line or else you will get back to the sealer's driver. Where do we go? In the State conferences I notice they call their county, town, and city sealers, and I notice they do not call the drivers and the laborers in the office—they draw a line somewhere between the bottom and half way up. Likewise, in this national conference, we have to draw a line somewhere. Look forward a few years and in a little time we are going to have a conference of from 1,000 to 1,400 people here. What then? Questions of a routine nature can be taken up by an "aye" and "nay" vote on the floor, but questions of great importance have to be taken up by ballot and with care and time. Do you not want to draw a line in a national conference just as you do in a State conference? With regard to setting the limit at 300,000, you have to set it somewhere, and 300,000 seemed to your committee to set a limit at about a size where the city department becomes important enough to have broad enough questions to settle so as to be comparable with the State departments. There is no reflection on the county or town sealer, but I submit to you that the State sealer, the State superintendent, or the superintendent in the large city deals with problems

of greater magnitude, and is better qualified to deal with the broad problems of State and Federal legislation or tolerances and specifications which are settled in the long run by legislation than are the smaller local men, even though they may be longer in service or may be more intellectual, because they are not handling that kind of propositions.

The CHAIRMAN. The question is called for and I will ask the secretary to call the roll. In order to get this clear, Mr. Maroney has stated his amendment as follows: To substitute for the first section of article 3, which defines the membership as consisting of State officials, all State, county, and city officials. Am I right?

Mr. MARONEY. Yes, sir.

The CHAIRMAN. That is the motion before you, that the membership shall consist of all officials. Is it clear? The vote is on the amendment; that is, if you want to include in the membership all of the officials you vote "aye"; if not, "nay."

(The secretary called the roll for a vote on the amendment made by Mr. Maroney, and the amendment was rejected.)

Mr. EAGAN. Mr. Chairman, I desire to offer an amendment to the section, to the effect that only delegates from States, when duly accredited, have the right to vote upon the questions mentioned in the section.

(The above motion was duly seconded.)

The CHAIRMAN. You have heard the motion and second.

Mr. SHARP. Mr. Chairman, I believe that Philadelphia, being separated from the supervision of the Chief of the Bureau of Standards, and representing 1,275,000 people, should have a chance to vote upon these very important questions.

Mr. STARN. I think it would be unfair for the city of Philadelphia, for the city of New York, and like cities to be shut out of being represented in this national conference. They are towns of importance. I think where the law of the State provides that those cities are apart from the State bureau, that the chief of those cities should be admitted to the conference and he should be allowed to enjoy all the privileges of the conference.

Mr. EGAN. On behalf of that motion I desire to say that for the settlement of those questions that are to come, those two subjects, I think the State delegates are qualified to vote upon the matter inasmuch as they ought to be well posted on the law of their States. They ought to be and will be, no doubt, well qualified to vote on the settlement of the specifications and tolerances. I offered the substitute motion because I thought there was a distinction being made in favor of some of the larger cities, and because of the force of your argument in favor of State delegates settling that question, and I hope the motion will prevail.

Mr. STARN. Just at that point, it surely would be unfair to the people of New York City and the other large cities not to be represented in this conference. Here is the point which I think Mr. Egan does not clearly understand: Where the State has provided for these cities and separated the cities from the States they take no part in the State organization. That is correct, is it not, Mr. Sharp?

Mr. SHARP. That is correct under the law that was passed in reference to Philadelphia, and that goes into effect next Thursday.

Mr. STARN. That is the point in question now. Where are these people to be represented? They are not represented in their States, because they are no part of the State organization and I do think that under such a law they should be entitled to be a part of this national conference.

Mr. CLUETT. The department of weights and measures of the city of Chicago will be placed in a rather hard position in the matter of having a voice in the specifications and tolerances and in State and National legislation unless it is given the right to vote on these matters. If that right is restricted to State officers or State delegates only we will be placed in the position of having no voice ourselves and on one in the States to speak for us, because the State of Illinois has no active State sealer or active State weights and measures department. Chicago has about one-half of the population of the entire State of Illinois and about one-thirtieth of the population of the United States, and has adopted and put into effect the specifications and tolerances approved by this conference, and I submit that the representative of the Chicago department should in common fairness be given a voice on all matters coming before this conference the same as if Chicago was a State.

If there is objection to taking in cities of over 300,000 population and giving them the right to vote on all matters coming before this conference the same as State delegates, I believe an amendment to the constitution and by-laws should be passed to read something as follows: In States where there is no active State weights and measures department and there is an active city department within that State, or in States where there is an active State department having no jurisdiction over the city departments, then in that case the representative of the city department shall be given the same rights and powers that a State department would have. Or if this would prove to give any one State more representation than would be fair and equitable, let the city departments within the State select one of their number to vote for and represent them in the two subjects restricted to the votes of State delegates.

Mr. FARRELL. By the vote killing the amendment to this proposed constitution, we have automatically eliminated two of our executive committee, one of our committee on tolerances and specifications, one of our committee on constitution and by-laws, one of our committee on reference, and one of our committee on the metric system; and I do not see, therefore, why anyone—if we are going to have a State conference—except a State delegate is entitled to vote. As long are we are going to cut out the county men, as long as we are going to cut out the smaller-city men, I would request everyone to vote in favor of cutting everyone out except the State delegates. We cut out the deputy State superintendent of weights and measures of Washington; we cut out Mr. O. Evans Mikesell, county inspector of weights and measures of Washington, Pa.; we cut out Mr. Connors, of our committee on tolerances and specifications, and of whom I think I voice the sentiment of the whole conference that there is no one better qualified to act on that subject than he; we cut out the chairman of the committee on constitution and by-laws, who is the State deputy superintendent, and he, being only the second man of the State, is not entitled to appear as a member of this conference; we cut out also Mr. E. F. Stimpson, he being a deputy and not entitled to be on the

committee on reference. We cut out the deputy sealer of weights and measures of Oregon.

Mr. SHERMAN. I would like to correct a misapprehension here. The member evidently did not read this clearly. The gentlemen you refer to are not struck off from these committees. The proposed constitution provides that such members may serve on any committee; but they can not hold the elective office of president, vice president, secretary, or treasurer, and they can not vote on the two questions of States or Federal legislation, or tolerances and specifications. "Executive officers" was the only term used.

Mr. RICHARDSON. I want to ask Mr. Farrell a question. Are you State superintendent of weights and measures of New York?

Mr. FARRELL. Yes, sir; I have the honor of holding that position at the present time.

Mr. RICHARDSON. Have you any control over the city of New York in your official capacity?

Mr. FARRELL. Yes, sir.

Mr. RICHARDSON. Then why can't you represent it here?

Mr. FARRELL. I suppose I could. I happen to be a resident of the city of New York, and, although I feel that I would make quite a good representative, still I believe that there are certain men in the department in the city of New York who are more qualified, by their ability and by their length of service in weights-and-measures work, to do more of the real work in weights and measures than I ever hope to be able to perform, although I am standing here now at the feet of teachers and am putting in my time in the studying of books, trying to find the beginning, but have only succeeded in getting my feet on firm ground.

Mr. RICHARDSON. Could they not concentrate their information on you and let you bring it down?

Mr. FARRELL. I feel that my shoulders are not broad enough to carry so heavy a burden.

Mr. RICHARDSON. The gentleman from Chicago made the statement, a moment ago, that Chicago brags about having half the population of Illinois. Do you think Chicago ought to be represented?

Mr. CLUETT. Yes; I think so.

Mr. RICHARDSON. Then, what about the balance of your population out there. Ought they not to be represented, too? I oppose the voting privilege to any except the legally authorized heads of the weights-and-measures departments, or their duly appointed proxies, and shall favor that each such head or proxy be not admitted as a voting member of this association unless regularly commissioned by the governor of his State. I favor the admission to seats on the floor of the conference, and the right to participate in the discussion of all city and county sealers who may attend; but no further rights, and these only on the sanction of their State head or his proxy. Admission of other than the State heads will, in my opinion, render the conferences top-heavy, and impede the progress and efficiency of their work. Seats for the commissioned State representatives should be marked and assigned to them in a body, and city and county sealers, and others wishing to attend, be assigned separate seats in the rear.

The CHAIRMAN. The amendment is to eliminate all city officials from certain privileges. In other words, if you want to confine the

convention solely to State officials, vote "aye," and if you want to adopt the broader line and take in the larger city officials, vote "nay."

(The secretary called the roll for a vote, and the amendment was rejected.)

Mr. STARN. I move that sections 2 and 3 of Article III be adopted as read.

Mr. LINCOLN. The section mentions "chief executives of Federal or State departments." The chief of our department is a very efficient man, and I do not allow any man to be second to him, but he does absolutely nothing in weights and measures. I am the only man who does anything in Michigan and who has anything to say on weights and measures. That cuts me out.

Mr. STARN. He would be entitled to send this gentleman as his representative.

The CHAIRMAN. The governor could delegate you.

Mr. UMPLEBY. Mr. Chairman, I am county inspector of Lake County, which has a population of about 240,000, and it is growing very rapidly and it will be but a very short time before it is in the 300,000 class. There are five cities in that county, and it is hardly likely any of them will reach that population; but the county is represented by county officials. I do not believe it would be wrong to include in there county officials who represent a county of 300,000.

Mr. SHERMAN. Mr. Chairman, your committee will accept the amendment suggested, providing that any chief executive of a department may send a deputy in his place.

I want to say for the committee that the question of the county with a large population has been considered, and here is the answer to that, which you will find will occur in a great number of cases: It will mean that you will have a duplication of representatives from the same section; for instance, Philadelphia county will have a man, and Philadelphia city. The county that has a large population has it because it contains a large city, usually, and we have to meet that situation in some way.

The CHAIRMAN. The question is called for.

Mr. SHERMAN. Your committee did consider several such cases. I might add there is another such case in New Jersey. I might add there will also come another such case in Minnesota; there will come another such case in Illinois; and there will be several such cases. There will be such a case in Cleveland. We have to meet that sort of case in some way; the line must be drawn somewhere, and it seems best to your committee to draw the line at the point where it would prohibit a dual representation where the cities of equal size would have only a single representation. Such places as this have the right of a State representative.

Mr. HAND. Just one point. I want to know if it is clearly understood that these paragraphs include those weights and measures officials in our insular possessions. Is that clearly understood?

The CHAIRMAN. Yes, sir.

Mr. RICHARDSON. Mr. Chairman, you have segregated the questions to be voted upon; you set apart certain questions to be voted upon by the regular authorized delegate from each State. If the other delegates are required to vote on everything except the two

sections mentioned, why are they not also entitled to vote on those, too?

The CHAIRMAN. That matter has been answered several times. The two groups include all the questions of State or National significance. They are the questions that, after all, concern very little the man who drives the wagon around and puts the weight on the scale and tests them. They are the questions that concern the man at the head of a large department taking care of matters of administration and taking care of matters of a National character, laws and so forth. That is the reason for that distinction to leave the vote on those subjects up to the men who have to deal with them.

The CHAIRMAN. The secretary will proceed to call the roll.

(The secretary called the roll for a vote, and the motion was agreed to.)

Mr. GOODWIN. I move the adoption of section 4 as it has been read by Mr. Sherman.

(The motion was seconded and agreed to.)

Mr. SHERMAN. Article IV of the constitution reads as follows:

ARTICLE IV.

The officers of this association shall be a president, vice president, secretary, treasurer, and there shall be the following four standing committees: Executive committee, legislative committee, committee on tolerances and specifications, and committee on qualifications for membership.

The CHAIRMAN. Unless there is objection we will proceed to the next article.

Mr. SHERMAN (continuing):

ARTICLE V.

SECTION 1. It shall be the duty of the president to preside at all meetings of the association; to enforce a due observance of the constitution and by-laws; to decide all questions of order; to offer for consideration all motions regularly made; to call special meetings, appoint all committees, designate chairmen to the committees; and to perform such other duties of his office as it may require. He shall make no motion or amendment, nor vote on any question or motion, unless the association be equally divided, when it shall be his privilege to cast the deciding ballot.

SEC. 2. It shall be the duty of the vice president to preside in the absence of the president and perform the duties of that office.

SEC. 3. It shall be the duty of the secretary to keep the minutes and records of the association; to inform candidates of their election; to notify them of dismissal; register the names of the members; issue all notices required; and perform all other duties pertaining to his office as may be required of him by this association.

SEC. 4. It shall be the duty of the treasurer to receive all moneys of the association and to keep a written account of all receipts and disbursements. He shall make an annual report in writing to the association, which report shall be sworn to and subscribed in person before a notary, and his accounts shall at all times be subject to review by the committee on qualifications for membership, which shall audit the account not less than once each year.

SEC. 5. It shall be the duty of the executive committee to determine the dates of meetings; pass on actions and reports of all other committees; perform all duties outlined for it in other sections of this constitution and the by-laws, and such other services as the president may direct, or the sense of the conference may demand.

This committee shall consist of the four elected officers of the association and three others, elected on one-year terms by the association.

SEC. 6. It shall be the duty of the legislative committee to familiarize itself with all existing weights and measures legislation; to draft, or have drafted

by proper authorities, all legislation of Federal, State, or local importance for which it sees a need; to assist in securing the passage of beneficial legislation; and to educate the various legislative bodies to a better conception of the scope and importance of weights and measures work. This committee shall consist of three persons appointed by the president, of whom at least one shall be trained in the law, and all members of this committee by their acceptance of the appointment are bound to conformity to the wish of the conference as expressed in its most recent formal action on any subject it may have under consideration.

SEC. 7. It shall be the duty of the committee on tolerances and specifications to consider specifications suggested by the conference, or by others, or originating with themselves, tending to improve the type of apparatus, or to eliminate such as is designed to or may be used to facilitate the perpetration of fraud; examine and study types of weights and measures and weighing and measuring devices for the purpose of ascertaining their accuracy and the details of their construction; to determine, in their best judgment, what constructions are proper and what tolerances should be allowed, and to make such reports and recommendations from time to time as they may deem necessary and advisable. Further, to investigate any additional problems that may be assigned for that purpose by the conference and make reports and recommendations thereon.

This committee shall consist of three persons to be appointed by the president.

SEC. 8. It shall be the duty of the committee on qualifications for membership to audit all accounts as specified in section 5 preceding, and to try all cases of alleged misconduct, etc., on the part of members of this conference, or weights-and-measures officials who are not members. On the occasion of any person or body of persons or any corporation bringing charges of misconduct, dishonesty, or incompetency against any weights-and-measures officials, whether said charges are formally preferred or informally asserted, it shall be the privilege of either the accuser or the accused to call upon this committee for an investigation of the case. For such investigation the committee shall have authority to summon witnesses, such summons being mandatory upon any member, senior member, or honorary member of this association, and may administer oaths to witnesses. All investigations shall be open, and under no circumstances shall any person be reported by this committee without full and open hearing of his case. After thorough investigation this committee shall submit a report of its findings, with recommendations, to the president for reference to the association, or, if in his judgment the nature of the case be such as to demand prompt action, to the executive committee. On recommendation of this committee, it shall be the duty of the president to introduce to the executive committee or to the association a resolution to expel from membership any person against whom serious charges of misconduct have been sustained. It shall be the duty of the president, on recommendation by this committee, to introduce to the executive committee or the association a resolution to disbar from future intercourse with this association any person, persons, or corporation found to have made charges of misconduct, etc., without proper justification, or with malicious intention to harm the reputation of the accused, or with knowledge of their falsity, for political effect. Upon acceptance by the association (or executive committee) the written report of the committee on qualifications for membership shall be forwarded to each party in the controversy investigated, to the governing bodies or officials of the jurisdiction affected, and (if the executive committee deem the case so serious as to warrant it) to the press for the information of the public. This committee shall consist of three persons. Its expenses shall be defrayed from the treasury of the association at the discretion of the president.

Mr. FARRELL. Does the section provide for a hearing?

Mr. SHERMAN. The provision is that the committee, acting under the guidance and at the discretion of the president, shall investigate and report.

Mr. FARRELL. I would suggest that some amendment be put in there that the committee give a hearing to the accused and that the committee be authorized to issue subpœnas or notice in the nature of a subpœna to call witnesses before them, and that no action whatever be taken by the committee until the accused is heard and allowed to bring forth his witnesses.

Mr. SHERMAN. We assumed that the committee would have common sense, and that the president would appoint members who had common sense.

The CHAIRMAN. I think it would be well to put that in. It simply makes the matter clear.

Mr. FARRELL. As I understand, it will be so amended?

The CHAIRMAN. Yes.

Mr. SHERMAN. The constitution continues as follows:

ARTICLE VI.

NOMINATION AND ELECTION OF OFFICERS.

Nominations shall be by petition. Any petition delivered to the secretary previous to the call to order for the election of officers, and signed by not less than 10 members, of which 3 must be senior members, shall suffice to place the name of the candidate in nomination.

SEC. 2. Election shall be by majority vote. If on the first ballot no candidate has achieved a majority, a second ballot shall be taken, with all but the three leading candidates eliminated from consideration. If there still be no majority, a final ballot shall be taken with the third candidate eliminated.

ARTICLE VII.

AMENDMENTS TO CONSTITUTION.

Every proposed alteration, amendment, or addition to this constitution or the by-laws hereto annexed must be submitted in writing to the secretary of the association, who shall notify the members present at the next regular meeting, at which time the said amendment, alteration, or addition may be adopted by a two-thirds vote of each class of members present.

ARTICLE VIII.

SUSPENSION OF BY-LAWS.

A by-law may be suspended in case of an emergency by a two-thirds vote of all members present.

ARTICLE IX.

This constitution shall be in effect immediately upon its passage.

Mr. SHARP. I move that the constitution be adopted as read.

(The above motion was duly seconded.)

Mr. RICHARDSON. I favor an amendment to Article I of this constitution to make it read as follows:

The association shall be known as the "National Association of State Weights and Measures Officials."

The CHAIRMAN. You have heard the motion to adopt the constitution as read as a whole. Those in favor say aye, opposed no.

(The motion was agreed to.)

Mr. SHERMAN. I will now read the by-laws. [Reading:]

BY-LAWS.

ARTICLE I.

MEETINGS.

This association shall hold its meetings annually, during the month of May, at Washington, D. C. The specific days on which the sessions shall be held shall be determined by the executive committee from year to year.

SEC. 2. At any meeting regularly called by the president, after due notification to the membership, those present shall in all cases constitute a quorum.

SEC. 3. The president may, in his discretion or on recommendation of the executive committee, call a special meeting of senior members. At such special meetings no formal action shall be taken on any matter other than those on which the senior members have the sole voting privilege, as defined in Article III, section 3, of the constitution.

SEC. 4. The president may at any time call a special meeting of any standing committee.

Mr. FARRELL. I object to section 1. I have been directed by the State association of New York to come here and move that the next conference be held in the city of New York. As I said this morning, the question of weights and measures has become of vital interest in the State. It has become doubly so in the city of New York. There is now in process of formation a committee of 1,000 of the largest wholesale dealers in all parts of the United States to cover the cause of weights and measures. If it is possible for this conference to meet in the city of New York next year, I firmly believe that the question of weights and measures throughout the United States and the interest in it would be furthered to an extent never before dreamed of by any of us. I therefore move you that this section be amended so that every year we will vote as to where the next conference will be held.

Mr. SHERMAN. Mr. Chairman, I want to state that this question has been thought about somewhat and was argued a little last spring and argued everywhere where people had talked about it during the past year, and, outside of a very few, the opinion had seemed to be unanimous that not only was Washington a good place, because Congress is here, because we have here at the bureau better facilities for demonstration than elsewhere, but also because all over the United States the officials can get their legislative bodies, their mayors, or their governors to send them to Washington on official business who never would be convinced that a meeting any place else would amount to anything but a junketing trip.

In addition to that, I want to call attention to next to the last article in the constitution, which provides that a by-law may be suspended by a two-thirds vote of all members present. In other words, we may suspend this by-law by a two-thirds vote of all present at any time there appears to be a reason why we should meet in some other city.

Mr. STARN. I would like to ask the gentleman from New York what it would sound like from a national point of view if New York City desired that a session of the United States Senate be held in New York City? What the gentleman says sounds very nice, but I do not think it would be judicious. This is a national body; this is the city of our National Government; here is the Bureau of Standards; and that is an answer to any question that might be conceived by many minds, as I see it.

The CHAIRMAN. Gentlemen, there is a good deal to what Mr. Farrell has said. It is a question which has troubled me a great deal. I have found the fundamental requisite was to get representatives all here at Washington, not only on account of the importance of national legislation but on account of the touch of the association with the bureau, and I had hoped the bureau might be a clearance house of weights and measures apparatus and things of that sort.

On the other hand, there would be a good deal to be gained by having an occasional meeting somewhere else. That can be done by suspending the by-laws; or we may come to a plan which has been adopted by some of the organizations connected with the Government which have a midyear meeting.

Mr. STARN. This is a national body, and this is the seat of Government. If we could go to New York or Milwaukee you would find your humble servant there, and if we are coming to Washington I might be prevailed on to come, but not prevailed on to vote. I am happy to say if you want to go elsewhere, I would like to have the convention go to New York some time when I am going there.

Mr. LINCOLN. We have had some trouble with our board of auditors in Lansing, sending out delegates, and they take the position that when these delegates go out it is sort of a pleasure trip, and if you are going to change the place of meeting I would suggest that you move it to Chicago, which is more central, and not move it off to one side of the United States. It is about all we can do to get down to Washington. Our commissioner doubts very much if the board of governors will allow him to go to California to the food show, as they regard it as a junketing trip. Therefore I do not believe you should change the place of meeting from city to city.

Mr. UMPLEBY. If you could move the Bureau of Standards to New York it would be all right, but as you can not move it, I suggest Chicago, which would be right next door. There is one other matter that is worth considering, and that is the time. A man coming from the West can often get over here at one-half fare for some national event that is bringing a lot of people. Next week we have an excursion rate from the West which would save one-half car fare, and it might not be advisable to set the time for next May so far in advance.

The CHAIRMAN. I am not sure but what we can get special rates for this convention.

Mr. ADAMS. Mr. Chairman, beginning the 1st of June the railways always offer a rate east to New York and Washington at one and one-half fare for 60 and 90 days, and I feel sure if we had the convention later in the year, say, the beginning of the first week in June, we would no doubt get a great many more delegates.

Mr. SHERMAN. Your committee has thought about those things and studied them. The only reduced rate at this season of the year that can be counted on, year by year, is the reduction that comes on all trips to Washington around Decoration Day. There is the prime argument for setting the date in the month of May. The summer rates go in effect in June, but if you come here once in June you will never come again. There is no one who spends a week here in Washington after June if they can help it. On the other hand, there is another thing to be said, which is that most of the delegates who come from long distances are delegates who are sent by their States or cities, and the States or cities are going to send them, and the question of whether or not they get an excursion rate will not have much to do with it. You will notice that the specific days on which the meetings are to be held is left to the executive committee, in order that that committee might adjust dates to good advantage.

The CHAIRMAN. I think we may trust the executive committee to do that. I will have the matter of rates looked up.

Mr. FARRELL. I move that a vote be taken on the amendment as I made it, inasmuch as I was directed by my State officials to make it. My motion is that "in the city of Washington" be eliminated.

(The motion to amend was seconded, and the amendment was rejected.)

Mr. SHERMAN. Article II of the by-laws reads as follows:

ARTICLE II.

INITIATION OF MEMBERS.

At the initiation of any new member, senior member, or honorary member of this association, the initiate shall make the following oath or affirmation:

"I do hereby swear (or affirm) that I will, so long as I shall retain the position through which I became eligible to this association, at all times strive, both directly in my work and indirectly through my influence, to secure such legislation and such administration of laws, as to insure at all times and in all places the protection of just weight and just measure to both parties in every transaction; so help me God."

Mr. FARRELL. Under the law is not every appointee and every State man compelled to take the oath of office before he is entitled to the emoluments of said office?

The CHAIRMAN. I presume he takes an oath with reference to the duties of his office.

Mr. FARRELL. I think such a provision in these by-laws is out of place. I do not think it nice to hold such a by-law up to the public generally; that the association to which we belong demands that we take an oath that we are going to do our duty; that we are going to be honest; and that we are going to see that everyone will get his just deserts.

Mr. SHERMAN. In answer to that, I want to say that this goes a great deal further than anything Mr. Farrell has outlined. The men are not always sworn in to anything like this oath. I myself, for instance, was sworn to uphold the Constitution of the United States and to make correct accountings, but there was absolutely nothing that left me with any feeling of being definitely bound to observe all the time that there are two parties to every deal, and I find in traveling about that the majority of sealers do not realize that they owe a duty to each party in the deal. I find the sealer on every hand who says he will pass the scale if it is slow—he only condemns it if it is fast. I find also the sealer who regards his duty as entirely ended when he has inspected the scales in his own territory and sealed or condemned them. He then considers his duty entirely ended, and he has no interest if the scale he has condemned in his territory is moved 50 yards to the other side of the State or county line and is in service over there. This is binding every man to extend his influence beyond the sphere of his own jurisdiction, to try to give just weights and measures in every place.

Mr. FARRELL. If I was not a member of the conference at this time, and was asked to subscribe to such an oath as that, I would refuse to do so.

The CHAIRMAN. I think we should very carefully consider this. I am not a lawyer, but it seems to me we may find ourselves in the position of having conflicting oaths.

Mr. STARN. Mr. Chairman, this is not a secret organization, and the oath is irrelevant. I have sworn thousands of people in an official

capacity, and it is mighty little I would give for a man's oath. If a man has no honor, his oath is not worth anything. I move that that section be stricken out.

(The motion was seconded and agree to.)

Mr. SHERMAN. Article III of the by-laws will now become article II, and it reads as follows:

ARTICLE II.

The dues of this association shall be: Members, $1 per year; senior members, $5 per year. Honorary members shall pay no dues. Dues shall be payable in advance on attendance at the annual conference of the association, on the first day of the meetings, and no active participation in the meetings of the conference shall be allowed to any member or senior member until his dues for said conference are paid.

Mr. RICHARDSON. I favor an amendment to the by-laws, to strike out Article II. Dues should not be assessed against any but voting members.

Mr. FARRELL. I move, Mr. Chairman, that we adjourn for dinner.

(The motion was seconded and agreed to.)

(Thereupon, at 6.05 o'clock p. m., the meeting adjourned to meet at 10 o'clock a. m. Wednesday, May 26, 1915.)

24309°—16——6

THIRD SESSION (MORNING OF WEDNESDAY, MAY 26, 1915).

The conference reassembled at 10 o'clock a. m. at the Raleigh Hotel in joint session with the American Scale Men's Association, Mr. William Waldron, of New Jersey, presiding as chairman.

The ACTING CHAIRMAN. In the absence of Mr. W. F. Titcomb, who was to give us a paper on "The troubles of a beginner," the next paper to be given will be No. 8 on the program, "Report on railroad track scale tests, conducted by the Bureau of Standards," by Mr. C. A. Briggs, of the Bureau of Standards.

REPORT OF RAILROAD TRACK SCALE TESTS CONDUCTED BY THE BUREAU OF STANDARDS.

By Mr. C. A. BRIGGS.

In 1901 the National Bureau of Standards was established by Congress to meet the modern needs in standards and standard measurements. As rapidly as was consistent with the proper execution of its work this bureau has taken up the functions as prescribed in its organic act, which functions may be briefly stated to be:

(1) The custody of standards.

(2) The comparison of standards presented for verification.

(3) The construction of standards of new form or character as required by industrial, technical, or scientific progress.

(4) Standardization of apparatus to test the output of manufacturers.

(5) Technical research in connection with the problems which arise in the construction, use, and preservation of standards.

(6) The determination of physical constants.

(7) The determination of the properties of materials.

One of the most important and fundamental functions of the Bureau of Standards is to provide standards of weight or mass. Enormous business is transacted over railroad track scales and other scales of large capacity, so that it is a matter of importance that accurate and authentic weights of large denomination be provided for testing them. In order to meet this need the railroad track scale-testing equipment of this bureau has been provided by a special act of Congress.

At the conference held here in Washington a year ago the operation of this testing equipment was demonstrated at the navy yard, but for the benefit of those who were not present at that time a brief description of the equipment will be given here.

The equipment consists essentially of eight 10,000-pound weights, four 2,500-pound weights, 10,000 pounds of 50-pound weights and smaller weights, so that the range of the equipment is, in round numbers, from 100,000 pounds to one one-hundredth-thousandth pound.

The weights are housed and transported from place to place in a specially prepared freight car, which is equipped with machinery for handling the weights, and with a gasoline engine driven electric generator for furnishing the required power and light.

In making the tests on railroad-track scales the weights are carried on a four-wheel truck having a 5-foot wheel base, which forms a part of the equipment and is itself a standard weight. The test load is moved from point to point on the scale or track by means of a motor mounted upon the truck. The electrical connection between the truck and the car is established by means of a wire cable which is disconnected whenever a weighing is to be made.

The equipment includes special instruments and apparatus, such as balances for testing small weights, strain gauges for making investigations relating to the design of scales, and other apparatus to meet special needs.

This equipment differs radically from the test-weight cars ordinarily used by the railroads for various reasons. The equipment required by this bureau was one in which it was necessary that any value of weight be available for testing; that the weights be of such a form as to preserve to a maximum degree their accuracy over long periods of time; that the test weight or test load be such as to be unaffected by transportation; and that the weights be of such a form that they could be verified in the field if it became necessary. None of these requirements were met to the required extent in the equipment previously used for testing railroad-track scales, so that the arrangement adopted was a new departure.

The functions of this test car may be briefly stated as:

(1) To furnish authentic standard weights of large denomination, hitherto lacking, for standardizing other weights used in technology and industry.

(2) To test the accuracy of large scales and weighing machinery used in commerce and industry.

(3) To standardize master scales, such as are used by railroads in standardizing their test cars.

(4) To investigate and determine the conditions under which scales are maintained.

(5) To determine the equipment and tests required to properly test, adjust, and maintain scales.

(6) To study the mechanism of the scale in reference to the proper design and construction of the parts of the scale.

(7) To secure information for scale specifications which can be used as the basis of the construction and purchase of scales by the Government and private individuals.

(8) To assist in the study of weighing methods and conditions in general in order to determine what practices are conducive to mistakes and bad results in weighing.

(9) To determine what variations are to be expected in the weights obtained for various commodities under the conditions under which they are weighed and transported.

It is apparent that this is a large and important field in which everything can not be accomplished at once.

Since the car has been in service scales have been tested in Connecticut, District of Columbia, Florida, Georgia, Illinois, Indiana,

Iowa, Minnesota, Missouri, New Hampshire, New Jersey, New York, North Carolina, South Carolina, Vermont, Virginia, West Virginia, and Wisconsin. In these States scales have been tested for private individuals, railroads, scale manufacturers, officials of the various States, and various department of the Federal Government.

At the present time over 300 track scales have been tested, and tests have been made also on elevator hopper scales, crane scales, wagon scales, coal tramway scales, and scales of smaller capacity.

It is not necessary to enumerate here the various defects which are common to scales, as these will be presented at a later date in a report on this subject. It is probably sufficient to state for the present that a large portion of the scales upon which business is transacted are not giving accurate results, it being nothing unusual to find errors from 1,000 to 2,000 pounds. These errors arise from two sources, first, the design of the scales are often such that they are inadequate to perform the service required of them, second, the scales are often inadequately tested and maintained after they are installed.

The fact that at the present time the Bureau of Standards has but one equipment available has naturally made it necessary to spend most of the time in tests of a more or less routine character, but a few opportunities have been taken of favorable conditions and special investigations respecting the engineering aspects of scales have been made. In spite of the fact that such investigations were made in a preliminary way the information so obtained appears to give important information fundamental to the proper design of scales, which is available nowhere else.

It is expected that with the new equipment a program of special tests will be carried out in which rather technical though important subjects will be investigated.

In the study of large scales this bureau has collected information for the purpose of preparing specifications for them. These specifications may be divided into two kinds: Namely, first, general specifications relating to the installation of scales in respect to their use and maintenance; and second, specifications in respect to the capacity of scales.

At the present time the Bureau of Standards has practically completed the specifications for railroad track scales and auto truck scales, both in respect to general matters and in respect to capacity. It is the intention to issue these in preliminary form so that full advantage may be taken of suggestions and criticisms offered.

Of the many subjects considered, the capacity rating of scales is one of the most immediate interest. Considerable attention has been given to this matter recently by others, but the problem has largely resolved itself into the application of fundamental engineering principles to the particular situation presented. This may be divided into two parts, namely: First, the specification of those factors which are fundamental and must always be provided for if scales are to be designed upon a rational basis, and second, the selection of the material, the working stresses, and the determination of representative or standard conditions for which provision must be made.

In becoming familiar with the details of the matter, old and new designs of scales have been carefully analyzed and some very interesting facts respecting them have been brought to light which explain the results which have been found in testing scales.

In a great many instances the capacities attributed to scales bear no relation to the service the scales are capable of performing. For instance, it has been a very common practice to state the capacity of a railroad track scale as the sum of the maximum loads the individual sections are capable of supporting—a practice which does not quite parallel, but which is as fallacious as establishing the strength of a chain as the sum of the strengths of the connecting links. In order to assist in correcting this matter the Bureau of Standards is emphasizing the fact that the capacity of any scale should represent the load it is capable of weighing under normal working conditions.

If an ordinary track scale is referred to, the required service is to weigh individual freight cars. If the capacity is stated at 100 tons it should be capable of weighing cars which weigh individually 100 tons and to support a train of such cars passing over the scale. In this way the capacity of the scales will be expressed in the simplest and most direct terms.

In the matter of establishing what might be termed a rational basis for determining the capacities of scales we apparently have the support of the scale companies, though it appears that there is some apprehension as to what will be the result of lopping off the capacities to the extent indicated.

The matter of introducing the use of the new capacities can probably best be accomplished by having it thoroughly understood that the specifications are Bureau of Standards specifications, which are based upon well-defined principles.

The capacity of automobile truck scales has also been studied. Data respecting the weight and distribution of the weight on the wheels has been secured from practically every manufacturer in the United States and specifications for auto truck scales have been drawn up in accordance with this information. It is hoped these will soon be ready for distribution.

The future work will continue that now being carried on and as soon as routine matters and the completion of work now being conducted will permit, the work will be extended and systematized.

In reference to technical features of scale construction it is hoped that a special study of the wear of steel knife edges can be conducted and that a special machine can be devised for testing them under conditions experienced by knife edges in use.

Cast iron is generally regarded as a treacherous material to use, but scale levers are generally constructed of this material. The efficiency of cast iron in levers and parts of various shapes will be studied so that the best possible designs can be developed. This study will form a part of the more general one of engineering structural materials now being conducted.

It is hoped that the technical work now being carried out will result in a maximum uniformity and efficiency in the construction of scales, consistent with the fullest individual freedom of design upon the part of the various manufacturers.

In the coming year it is hoped that plans can be put in operation whereby the facilities of the test car will be made more generally available by giving more attention to master scales, which in turn will serve as the source of standardizing scales in their respective localities.

The Acting Chairman. Is there any discussion or are there any questions to be asked?

Mr. Sweeny. Mr. Chairman, I rise to a question of privilege. I was unavoidably absent yesterday at the afternoon session, and I would like to be recorded as voting against the constitution and by-laws.

The Acting Chairman. The next subject on the program is "A method of adjusting railroad track scales," by Mr. H. L. Van Keuren, of the Bureau of Standards.

A METHOD OF ADJUSTING RAILROAD TRACK SCALES, BY MR. H. L. VAN KEUREN, BUREAU OF STANDARDS.

The installation of a new piece of apparatus, representing as large an outlay as does a track scale, usually receives considerable attention. Great care is taken to have a suitable foundation, a good set-up, and in general a neat and modern installation.

No less important is the maintenance of the scale which covers a period equal to its life. While no great amount of work may be done at one time, yet, during the course of 8 or 10 years, considerable more attention is given the scale than during its construction. Scales must be overhauled occasionally, repaired frequently, and adjusted continually.

It is of a particular phase of this important work, the adjustment of railroad-track scales, that the present paper is concerned, namely, the proper use of a test car and the interpretation of the observations, that will in general facilitate the adjustment.

Before an adjustment can be made on a scale, to correct the errors of multiplication, the actual errors in the individual sections must be known, and such observations as are made with a test car previous to the adjustment are for the purpose of determining these actual errors of the sections.

It is not feasible with a two-truck test car to separate the errors of the sections, a single-truck test car being essential. The shorter the wheel base of the test load the more accurately can the errors of the various sections be ascertained. Of the one-truck test cars in general use, even those which have the shortest wheel bases are such that when placed over a section of a scale the load is not entirely carried by that section, but a very appreciable portion is carried on the adjacent sections. Consequently the reading on the beam will include the effects of the inaccuracies of the adjacent sections.

The observed error of a section may accidentally be the same as the actual error of that section, as when the load is transmitted only through sections having the same actual errors, or it may widely differ by an amount depending upon the difference between the actual errors of the sections that receive the component parts of the load. In general, the observed or apparent errors differ from the real or actual errors of the sections. The practice has been to estimate, from the observations, the nature of the real sectional errors, the adjustments then being made in accordance with this estimate. With this method, however, repeated trials are often necessary to secure the desired result. A numerical example will serve to show some of the difficulties that are encountered.

Figure 1 shows a four section articulated girder scale, with the test truck in the positions that are ordinarily used, both in test and adjustment. On this scale, which has articulated girders over 12.5-foot spans, the 5-foot wheel base test truck used gives a maximum load concentration on one section of 80 per cent, whether the truck be centered over a section, as is done on the inner sections, or offset so that one wheel is just over the section, as on the end sections.

The notation used for the observed errors is the capital E, while that for the actual errors of the sections is the lower-case e, the subscripts in each case denoting the sections, which are numbered from left to right when facing the platform with the beam between the observer and the platform, namely, L, 2, 3, and R. A plus error signifies that the beam reading exceeds the load on the platform, a minus error the opposite condition.

In the present example suppose that with a 100,000-pound test load the actual sectional errors are $e_L=0$, $e_2=0$, $e_3=-500$ pounds, and $e_R=+500$ pounds. The observed error of section L would be zero, as all the load is transmitted through sections having zero error. The observed error of section 2 is —50 pounds, 90 per cent of the load being carried by sections 2 and L, which have zero errors,

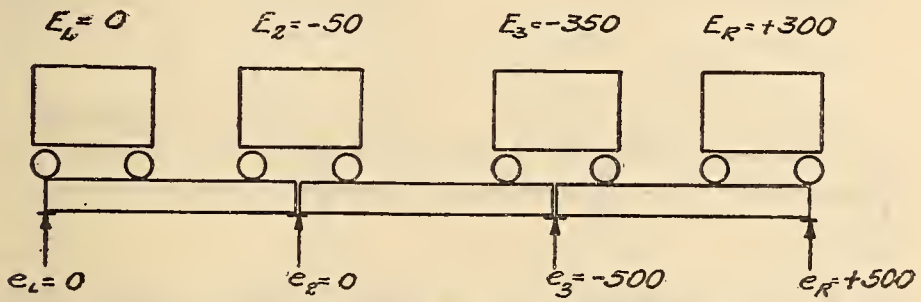

FIG. 1.—Ordinary positions of test truck for testing and adjusting.

and 10 per cent being carried by section 3, which contributes the —50 pounds. For section 3 the observed error consists of 80 per cent of the actual error of section 3, or —400 pounds, and 10 per cent of each of the actual errors of sections 2 and R,, or 0 and +50 pounds, respectively, which gives the observed result of —350 pounds. The +300 pounds observed for section R is the result of 80 per cent of the real error of section R plus 20 per cent of the real error of section 3.

From the test all that is known are the observed errors, and the adjustment of the scale proceeds under some difficulties that will now be shown.

The observations tend to indicate that section 2 is incorrect by —50 pounds, which of course is not true, as the actual error of section 2, as well as that of section L, is zero, and no adjustment is necessary for the left end of the scale.

The observed error of section 3 is —350 pounds, while that of section R is +300 pounds. It is the common practice to first equalize these observed errors, which is done by moving the nose iron on the end extension lever. If the leverage is so changed that the reading obtained with the truck on section R is —350 pounds (see

figure 2), the corresponding error of section R will be —310 pounds. The car is then placed on section 3 and a reading of —430 pounds is obtained. The leverage may then be further adjusted in the same manner, and after a few trials the observed errors of section 3 and section R may both be made equal to —440 pounds. The actual error of section 3, however, remains the —500 pounds and that of section R is now —430 pounds. When the right end is quickened 440 pounds, neither section R nor section 3 will be correct, the errors

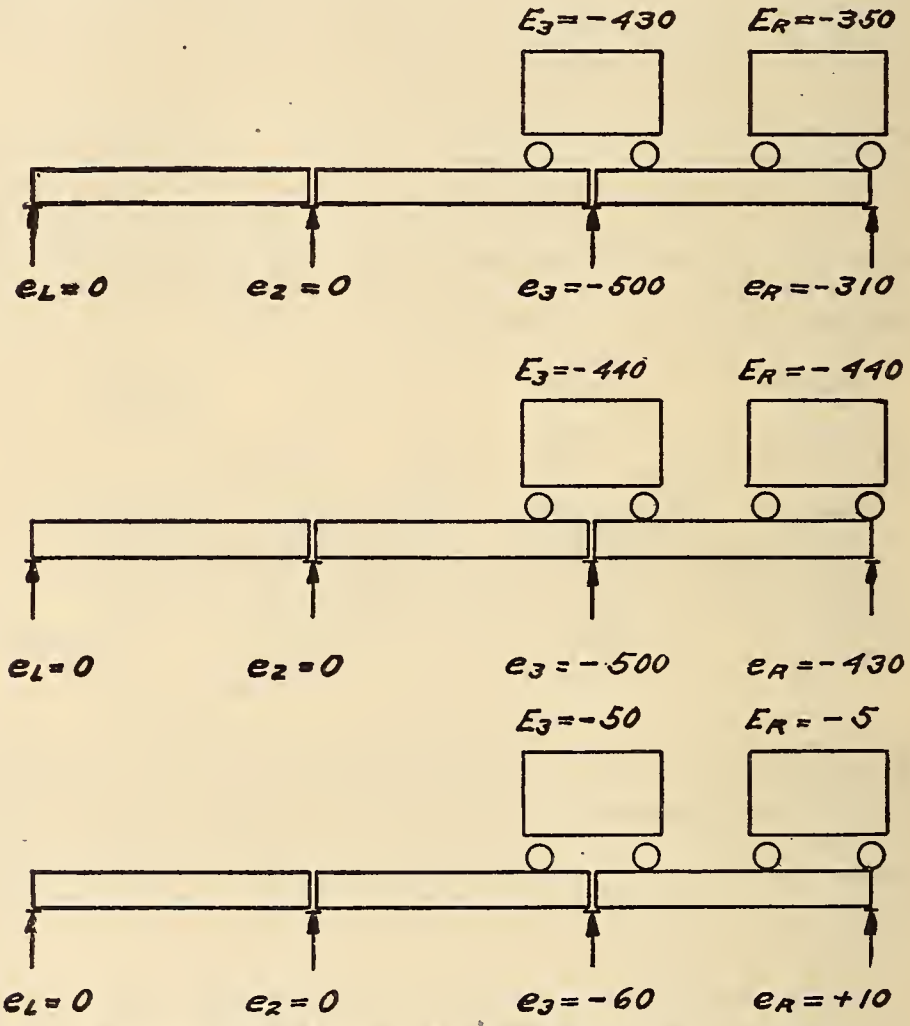

FIG. 2.—Showing difficulties of adjustment with ordinary positions.

observed being —50 and —5 pounds for sections 3 and R, respectively.

The difficulty lies in the fact that in the adjustment the attempt is made to equalize the observed errors of section R and of section 3, while the observed error of section 3 is being distorted by the part which is contributed by section 2.

While it is possible to determine mathematically the values of all the actual errors of the sections when the truck is centered over the inner sections, as is the general practice, the solution entails a

tremendous amount of labor and its use is consequently impracticable. If, however, a different method of placing the test load is used, the problem is so simplified that the actual sectional errors may be easily obtained, and whether or not they are computed a better condition exists. The improved method of loading is as follows:

Instead of centering the test truck over the inner sections, offset it toward the end sections so that one wheel is just over the section (see fig. 3). With this method the same load concentration is maintained on the section and the load is confined to two sections. At once the problem is simplified in that the number of quantities involved in the adjustment is reduced from three to two. No misleading indications are present in the observations for sections L and 2, while the adjustment of the right end of the scale is readily accomplished if the loading is made in this manner.

It is apparent that if the real sectional errors were both —500 pounds the observed errors would each be equal to —500 pounds. This condition may be obtained by making the observed error of section R equal to the actual error of section 3, or —500 pounds,

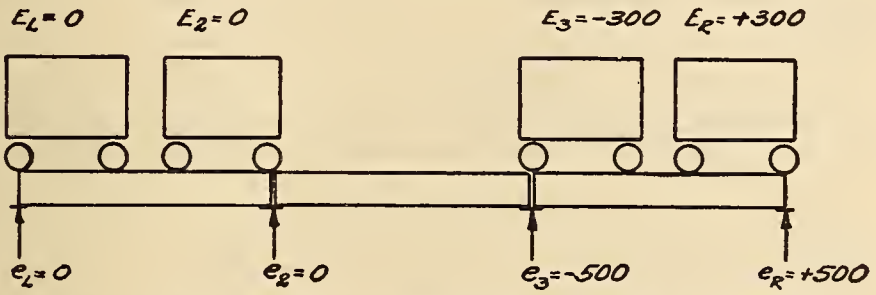

FIG. 3.—Improved positions of test truck for testing and adjusting.

after which both sections may be quickened by the same amount and both errors corrected.

The actual error of section 3 is not known, but may be found from a simple relation, namely, the actual error of any section is equal to the observed error of that section minus the observed error of the adjacent section, times a constant, plus the observed error of the adjacent section, or $e_1 = (E_1 - E_2)N + E_2$.

The proof of this equation is as follows:

Let e_1 and e_2 be the actual errors of sections 1 and 2; that is, these errors would result if the test load were entirely carried by one section. The load that is carried on section 1 when the truck is placed as shown in Fig. 4 is $W\frac{L-a}{L}$, where W is the weight of the truck, L the length of the span, and $2a$ the wheel base of the test truck. This factor $\frac{L-a}{L}$, which when multiplied by the load W gives the amount of load on the section is called the load factor D. The fraction of the load that is carried by section 2 when the truck is placed adjacent to section 1 is then $1-D$.

It is apparent then that the error E_1, observed for the position of the truck as shown in Fig. 4, will be composed of the real errors of sections 1 and 2, the amount contributed by each section being pro-

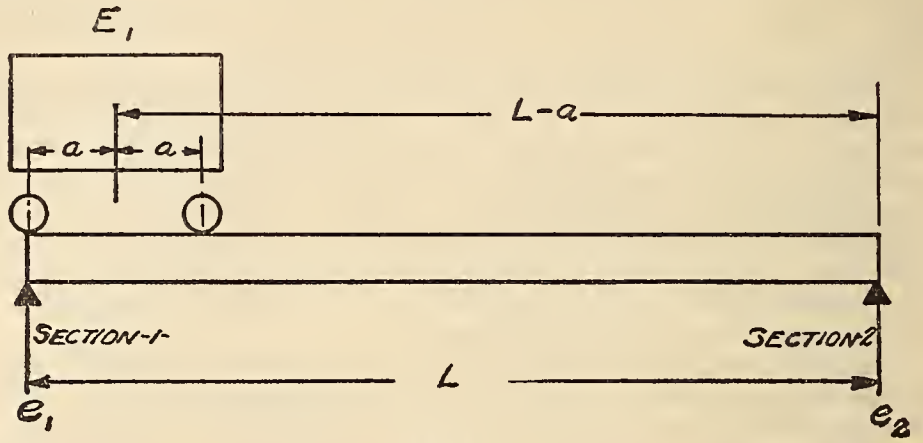

FIG. 4.

portional to the load it receives. The following equation may then be written:

$$E_1 = De_1 + (1-D)e_2. \tag{1}$$

For a corresponding position of the truck adjacent to section 2 a similar equation may be written, namely:

$$E_2 = De_2 + (1-D)e_1. \tag{2}$$

Multiplying equation (2) by $\frac{(1-D)}{D}$ there results:

$$\frac{(1-D)}{D}E_2 = \frac{(1-D)^2}{D}e_1 + (1-D)e_2 \tag{3}$$

Subtracting equation (3) from equation (1) there results:

$$\begin{aligned} E_1 - \frac{(1-D)}{D}E_2 &= De_1 - \frac{(1-D)^2}{D}e_1 \\ &= \left(D - \frac{(1-D)^2}{D}\right)e_1 \\ &= \frac{(D^2 - 1 + 2D - D^2)}{D}e_1 \\ &= \frac{(2D-1)}{D}e_1 \end{aligned}$$

Solving for e^1 there results:

$$e_1 = \frac{D}{2D-1}E_1 - \frac{(1-D)}{(2D-1)}E_2 \tag{4}$$

The term $\frac{D}{2D-1}$ may be replaced by N, and $\frac{(1-D)}{(2D-1)}$ by $(N-1)$ since $(N-1) = \frac{D}{2D-1} - 1 = \frac{D-2D+1}{2D-1} = \frac{1-D}{2D-1}$

Substituting these values in equation (4) it follows that

$$e_1 = NE_1 - (N-1)E_2 = N(E_1 - E_2) + E_2$$

The value of N which is equal to $\frac{D}{2D-1}$ may be expressed in terms of length of the span and the wheel base of the test truck used by substituting the value of $D = \frac{L-a}{L}$ in the above equation, or

$$N = \frac{\frac{L-a}{L}}{\frac{2(L-a)}{L} - 1} = \frac{\frac{L-a}{L}}{\frac{2L-2a-L}{L}} = \frac{L-a}{L-2a}$$

The Value of N may be computed from the above formula, but it is for convenience plotted in the form of curves, as shown in figure 5.

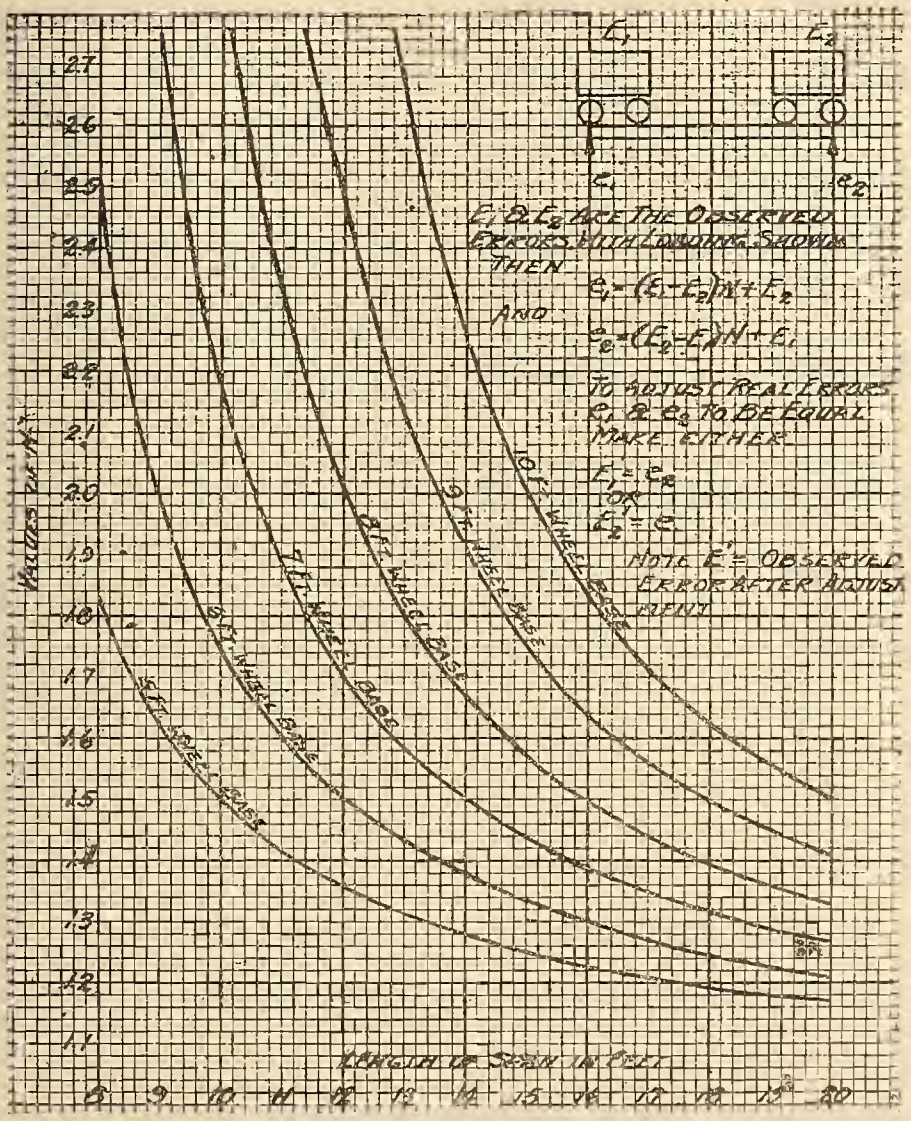

FIG. 5.—Reduction factors for obtaining actual errors of sections from observed errors.

It should be noted that the values of N are relatively large for long wheel-base test cars. It follows, then, from the formula that

the longer the wheel base of the test car used the greater will be the difference between the errors of the sections and the observed values, and the use of a long wheel-base test car makes the proposed method more necessary than if a short-test car is used.

Returning now to the adjustment of a scale having errors as shown in figure 3, for the scale under consideration, which has 12.5-foot spans, we find the value of N for a five-foot wheel-base test truck to be equal to 1.33, and using this value in the formula we find that $e_3=(-300-+300)\ 1.33+300=-500$ pounds.

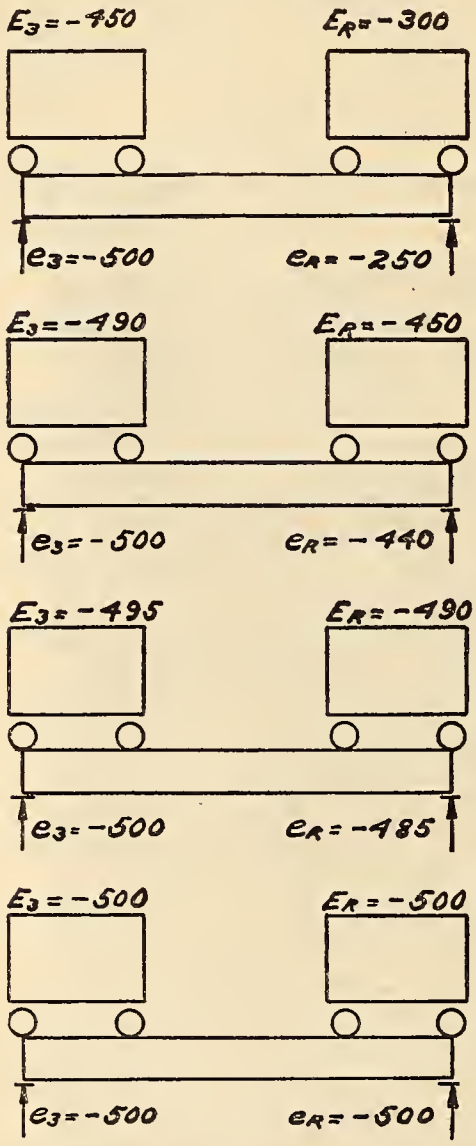

FIG. 6.—Showing adjustment by trial method with proposed loading.

If the leverage is then adjusted so that the observed error of section R is -500 pounds, the observed error of section 3 would be -500 pounds and the actual errors of both sections would be -500 pounds. Both sections are then corrected by moving the nose iron on the center extension lever.

If instead of using the foregoing method of finding the value to which section R is to be adjusted, the correct result may be obtained by trial. If E_R is made -300 pounds, E_3 will be -450 pounds (see figure 6). Then E_R is made -450 pounds and E_3 becomes -490, and so on, until E_R equals -500 pounds and E_3 equals -500 pounds. The real errors of section 3 and R are, under these conditions, both equal to -500 pounds, and when the right end is then quickened by 500 pounds the sectional errors disappear. In the case of a five or six section scale, where it is desired to bring the errors of three sections to the same value, the method of procedure is as follows: The two sections nearest the fifth lever are first made to have the same real errors as previously outlined. The errors observed for the offset positions of the truck on the span between these two sections will then be equal to the real errors of the sections. The end section is then adjusted until the observed error for the position of the truck adjacent to the end section is equal to the real errors of the other two sections or the errors observed when these two sections are in a condition of adjustment.

The discussion so far has been applied to scales of the articulated girder type, but the method may be applied with advantage to scales having continuous girders, as experiment shows that the load distribution of the continuous girder scale agrees closely with that of the articulated girder scale.

Figure 7 represents a four-section scale, 50 feet between the end sections, with continuous girders, consisting of two 24-inch 140-pound I beams, over the equal spans. With the 100,000-pound test truck centered over section 2, 81,000 pounds, or 81 per cent, was transmitted through section 2, and this is represented on the upper

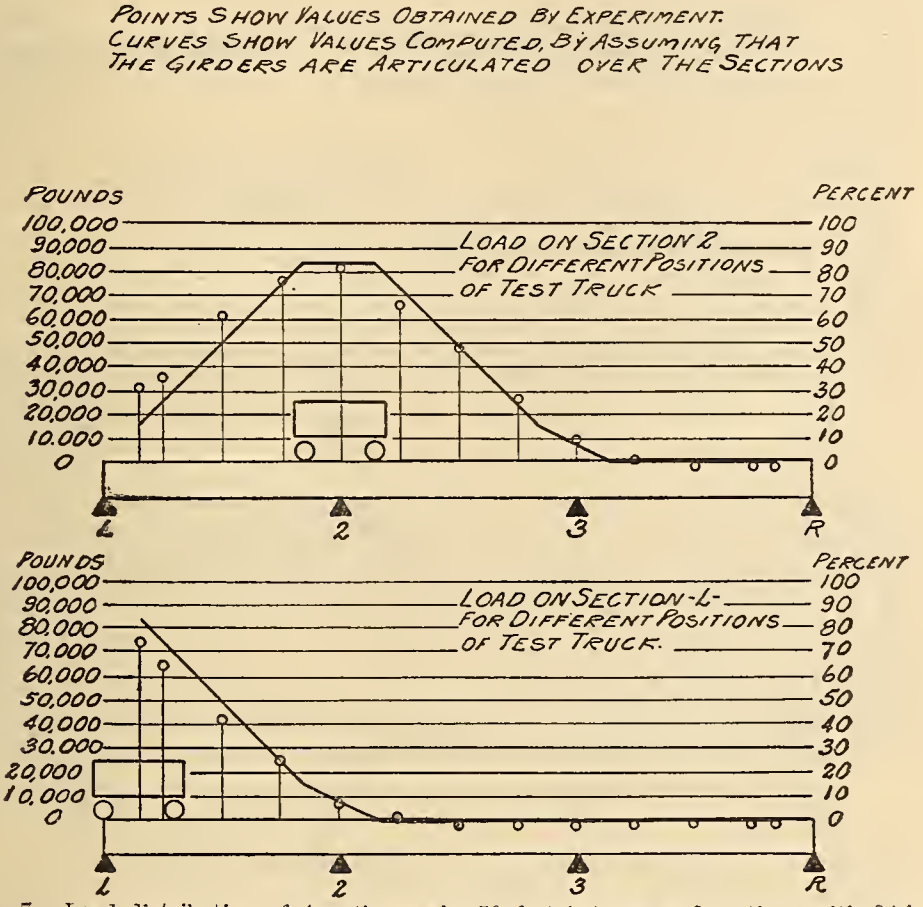

FIG. 7.—Load distribution of 4-section scale, 50 feet between end sections with 24-inch 140 I beams, forming continuous girders.

curve by the length of the line drawn through the center of the truck.

The dots represent the values obtained by experiment and the full lines represent the values computed by assuming that the girders are articulated over the sections. The height of the upper curve represents the amount of load that is carried by section 2 as the truck center is moved to different positions on the scale. As the truck is moved away from section 2 the concentration on section 2 decreases uniformly until one wheel crosses the adjacent section (section 3), when the concentration decreases at one-half of the former rate. When the truck is placed just to the right of section 3, as is done in the proposed method of loading, so that one wheel is

just over the section, there is no load carried on section 2. In a like manner, if the test truck is placed to the left of section 2, no load is carried on section 3, the load being confined to section 2, which carries 81 per cent, and to section L, which carries 19 per cent, as shown on the lower curve.

It should be noted that for the articulated girder construction the load concentration for a given section is constant as the truck passes over that section. Thus the same load concentration is maintained with the truck having one wheel over the section as when the truck is centered over the section.

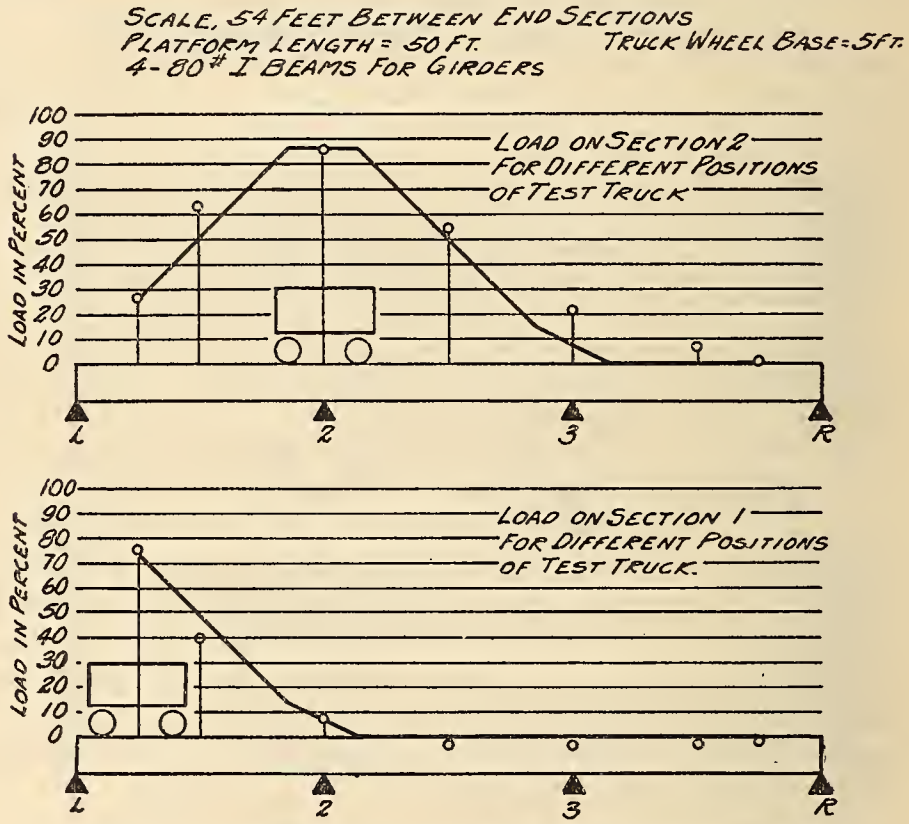

FIG. 8.—Load concentration for a 4-section continuous girder scale.

Figure 8 shows another example of agreement between experimental values of the load concentration determined on a four-section scale with continuous girders consisting of four 80-pound I beams. The agreement in this case is not quite as well marked as in the previous example. However, the determination of the experimental points was not as accurate as in the first example. The agreement is, however, sufficiently close in both cases to justify its use in the present connection, at least until future investigations disclose something better.

It is advisable then, when adjusting a track scale either of the articulated or continuous girder type, to use the offset method of loading, as explained. The use of a relatively long wheel-base test truck makes this method even more necessary.

The advantages of the offset loading may then be summarized as follows:

(1) The load concentration on the section is the same as if the truck is centered over the section.

(2) The resulting observed errors are composed of the errors of only two sections.

(3) The nature of the sectional errors is easily determined from the observed errors.

(4) Whether or not the formula is used the adjustment of the multiplication of track scales is simplified.

The Acting Chairman. In view of the fact that there are so many railroad track scale men present, if there is any question they would like to ask, the gentlemen would be glad to answer. [After a pause.] If there are no questions we will have the next paper on the program, "Automatic scales," by Mr. F. J. Schlink, of the Bureau of Standards.

AUTOMATIC SCALES, BY F. J. SCHLINK, BUREAU OF STANDARDS.

I. INTRODUCTION AND DEFINITIONS.

For the purposes of this paper, weighing scales may be divided into two classes, viz: Scales in which the weight of the load is determined by the manipulation of suitable balancing or equilibrating means, through the agency of an operator; and those in which the weight is obtained by merely placing the load to be weighed upon the scale and reading the indication of some self-acting mechanism. The first class comprises the various forms of lever scales and balances, and the second is a class which we shall call by the generic name of automatic scales. Automatic scales, again, are found in many forms, of which the following are the principal types:

(1) Scales in which the reading or registration is obtained directly through the agency of a variable equilibrating element which takes up a position or suffers a deformation dependent upon the magnitude of the load being weighed, this change of position or shape being reproduced in terms of weight indication through a suitable reading or recording device.

(2) Scales which perform repeated weighings of a definite amount of commodity, which though fixed for a single setting of the scale may be adjustable within a certain range. Such scales are commonly arranged to receive a continuous supply of the substance to be weighed, usually of a granular or powdered form, supplying it to the weighing elements until the predetermined weight is attained, after which the mechanism operates so as to discharge its load, then being in a condition to receive a new draft of the material. Scales of this sort are particularly adapted to the apportioning of a product into packages, or the weighing of a large quantity of a commodity by dividing it into separate equal portions, the total weight being determined as the summation of the several drafts.

Under the first head given above we may also consider those scales in which the equilibration of the load is secured in part by hand manipulation and in part by an automatic or self-acting mechanism. These may be called semiautomatic scales.

Automatic scales of class 1 and of the subclass of semiautomatic scales, to which I have just referred, are made in various forms and used in many branches of industry and trade. The ordinary computing scale, the penny-in-the-slot personal scale, and others are familiar examples of this type.

Semiautomatic scales consist usually of a combination of a self-reading mechanism with a sliding poise or added counterpoise weights, this modification being provided either to increase the weighing capacity without requiring too close a spacing of the graduations on the reading face or to afford a means of making, as by means of a tare beam, a mechanical subtraction of the weight of a container or vehicle, so that the weight which is indicated automatically will be the net weight of the commodity.

The second main division comprises the many forms of so-called packaging, bagging, or dumping scales; their use is restricted to applications of a more or less special nature.

The scope of this paper will be limited chiefly to those forms of automatic scales of especial interest to weights and measures officials, and I will attempt to outline the principles and elements of construction available in the design, and of interest in the testing or adjustment of automatic scales of these more usual types.

II. MEANS FOR OBTAINING AUTOMATIC INDICATION.

Generally speaking, automatic indication, as has been indicated above, may be obtained by the application of the forces which are transmitted from the weight of the load to some mechanism which takes up a definite shape or definite position for a given magnitude of the load. This implies the use either of an elastic body, the deformation of which bears some known relation to the external forces applied to it, or a system of nonelastic bodies, such system having a definite configuration for a given magnitude and direction of the forces which are applied to it.

The first class of apparatus is exemplified in the spring scale; the second in pendulum and cam scales. These more common types of construction we will next take up in order, though it should be remembered that they may be and frequently are used in combinations of various sorts.

(*a*) SPRING SCALES.

Of the many varieties of springs which might be used in automatic scales, the helical or screw spring, sometimes loosely termed the spiral spring, is the most common. Its form is such that it can be made cheaply in quantities, while the wire of which it is composed is fairly uniform in its properties, and the stiffness of the completed spring may be varied over a considerable range by simply varying the number of active turns.

In the simplest spring scales the extension under load is read directly by a pointer carried on the free end of the spring and passing along a graduated face. In other forms, where greater precision of reading is required, and where such extreme portability and ruggedness are not necessary, the changes in length of the spring are magnified by some suitable mechanism and transmitted to a

convenient reading face. This mechanism in its commonest development is shown in figure 1 and consists of a rack and pinion, the rack being connected to the free end of the spring and engaging with a pinion which is made part of a rotating arbor or spindle, upon which is mounted either a pointer or the reading chart. The general type of mechanism shown here is used in the simple forms of hanging-pan dial scales (the stabilizing links in this case being omitted), as well as in many of the more elaborate spring computing scales.

All forms of springs at present available are subject to certain changes which to a greater or less extent affect their utility as weighing elements. Among these are: (1) Imperfect elasticity, and (2) change of elastic properties and dimensions with temperature.

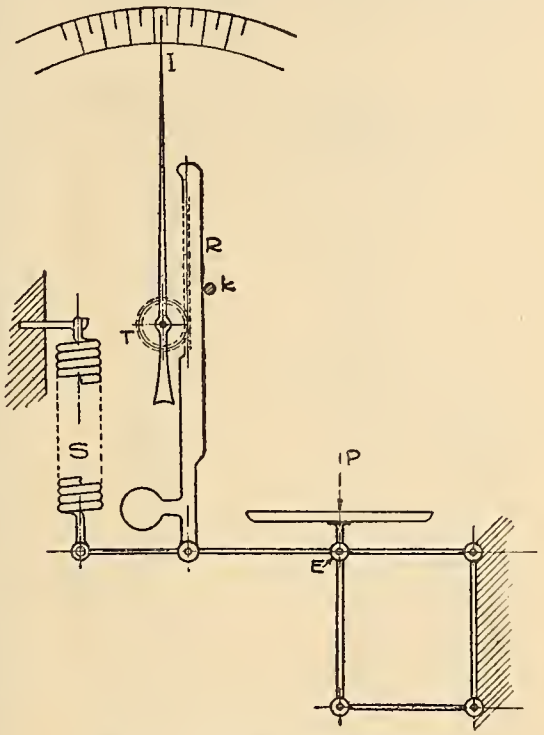

FIG. 1.—Stabilized spring scale.

The effect of imperfect elasticity is shown in the slight difference in the elongations of a spring at a given load, depending upon whether the load is being increased or decreased, and also by what are called fatigue effects, which consist in the persistence of a slight set or residual elongation after the removal of a load which has been allowed to act on the spring for a considerable time.

The effects of imperfect elasticity can be reduced to a minimum by using the spring at a low working stress, so that the material is never stressed near to its limit of elasticity, and by giving the spring a careful and properly chosen mechanical and heat treatment.

The error due to temperature variation of elasticity may be corrected or avoided by any one of several methods. One is to apply to the scale a device which will automatically change the ratio of the leverage or vary the working length of the spring as the temperature changes, and in suitable amount to compensate for the change of stiffness which is taking place in the spring itself. Another method, which is especially adapted for use with large spring-controlled platform scales, consists in keeping the spring at a constant and definite temperature, as by the use of a heating device working in a confined and insulated space and controlled by a thermostat.

Alloys of steel with other metals have been prepared which are suitable for the manufacture of springs and will either not change their elastic properties with temperature or will change in the opposite direction from ordinary spring steel; that is, will undergo an increase of stiffness with rising temperature. With such a mate-

rial available it is practicable to make a spring whose stiffness will be independent of temperature, either by using it alone or by combining it with an ordinary steel spring in such a way that the resulting combination will be properly compensated.

(*b*) PENDULUM SCALES.

Although we may not commonly think of it as such, the lever system of an ordinary beam scale is merely a combination of pendulums constrained to vibrate together. The action of such a system is approximately equivalent to that of one pendulum of appropriate mass distribution and inertia. Suppose that we have a lever scale in balance with the beam in equilibrium in the center of the trig-loop. If we add to the platform a small load which is less than the sensibility reciprocal of the scale, the beam, after oscillating for a time, will come to rest in a new position in the trig-loop. We know further that, for small displacements, the magnitude of this deflection from the initial position of equilibrium is closely proportioned to the added weight. We could then, by adding a pointer and graduated arc at the end of the scale beam, use such a scale as a pendulum scale, reading the small increments of weight directly on the graduations of the arc. Now this is exactly what is done in pendulum scales of a certain type, namely, those in which but small deflections of the pendulum are used. The sensitiveness is decreased by lowering the center of gravity of the beam, as by the addition of a heavy bob-weight, and the small displacements of the beam in the trig-loop, which are assumed proportional to the increments of load, are magnified by suitable means, as, for example, by a rack and pinion. By means of this gearing the limited motion of the beam about its fulcrum knife edge is reproduced in the larger motion of a pointer moving over a graduated arc or dial. Up to an angle of about 3° of pendulum deflection the error of this mechanism is less than one part in one thousand.

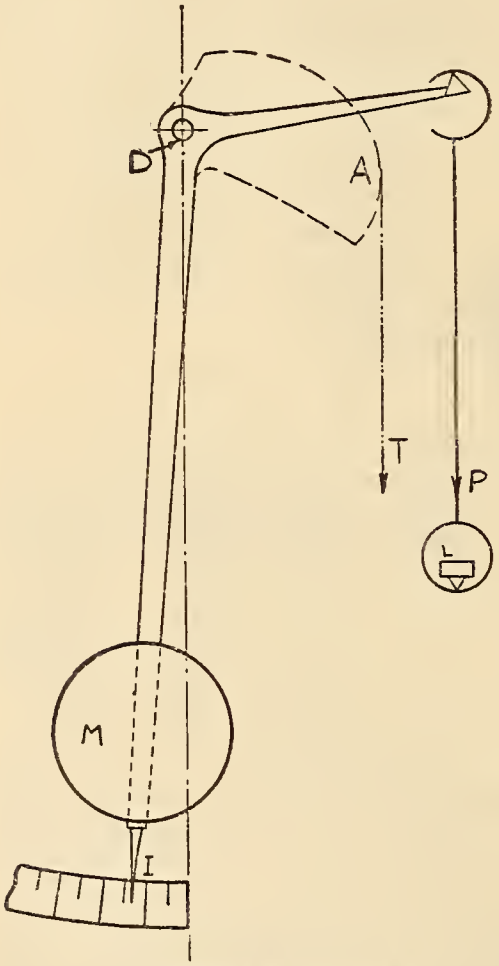

FIG. 2.—Simple pendulum scale.

Figure 2 illustrates the pendulum scale in its simplest form; in this case the pendulum arm itself carries the indicating pointer. As

soon as the angle of turn becomes large, however, we find that a graduated arc representing equal load increments is no longer uniformly divided, but changes its spacing according to some function of the angle of inclination of the pendulum. We must then resort to either one of two methods of procedure: Abandon the uniformly divided reading scale and divide the dial into unevenly spaced graduations correctly representing the load applied to the platform; or, while retaining the uniformly spaced graduations, apply to the mechanism a proper correction device to compensate for the differing rates of increase of pendulum deflection and platform load. While it is theoretically possible that such a correction could be obtained by a combination of pivoted bars forming a linkwork, such a method promises little on account of the great amount of complication and attendant frictional resistances which necessarily accompany the use of numerous turning or sliding pairs. On this account designers have turned naturally to a mechanism which involves the least number of elements to accomplish the desired correction, namely, a cam, about which is wrapped a flexible band or tape. By suitable adjustment of the contour of this cam, within certain practical limitations, any desired correction to the motion of the pendulum may be obtained. This arrangement is indicated by the dotted lines in figure 2, which show how the cam and tape may replace the knife edge carried on an invariable lever.

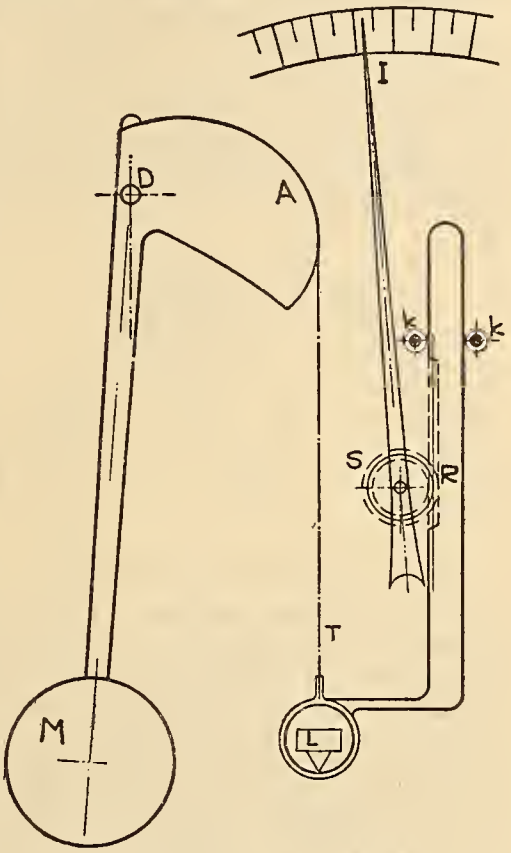

FIG. 3.—Pendulum-cam scale.

Figures 3 represents still another variation in the design of cam-pendulum scales. In this example, the cam is so designed that instead of equal increments of pendulum deflection being produced by equal increments of load, the lever *L*, transmitting the load from the platform, falls through equal vertical distances. Looking at it from another point of view, the indicator, which moves over a uniformly divided dial, is driven from the end of the platform lever instead of from the pendulum itself. While the result obtained is the same as in the previous instance, the problem of designing the cam for this mechanism is an entirely different one.

The use of the cam and tape mechanism is very common in the design of automatic scales, and we will find it of advantage to consider it more in detail under the later heading of cam scales.

It will be well at this point to call attention to certain important considerations which have affected the lines of development followed

by designers of pendulum scales. If the reading chart of a pendulum scale is divided into intervals which are not uniform, any change of level of the scale taking place in the plane of the pendulum will cause the pointer to start from a different point, and if the scale be rebalanced (as by changing the weight of the platform, or other parts affording similar adjustment) without being releveled, it will read incorrectly, since a given graduation interval represents different amounts of weight at different portions of the reading scale. If, on the other hand, the graduations are uniformly spaced, a slight shift of level of the scale has no more harmful effect than to change the zero reading of the pointer, and an adjustment of the balance by the means provided for that purpose, so that the pointer again starts from zero, will cause the scale to read correctly.

It is found in practice, however, that there are many installations where it is difficult or impossible to maintain the scale in constant and accurate level, and in such cases the frequent readjustment of the zero balance becomes troublesome. It is to avoid this difficulty that the double pendulum construction is being used. This consists, as is indicated in figure 4, of two equal and similar pendulums, symmetrically disposed with reference to the line of the pull P transmitted from the lever system. The pull rods or tapes attached to the separate pendulums are each connected to an equalizing bar or its equivalent, so that the pull due to the weight of the load is divided equally between the two pendulums. If such a scale be thrown out of level, one pendulum will be inclined ahead of its normal zero position and one back of that position. If the proportions of the mechanism be correctly chosen, the position of the pointer will not be appreciably altered, and it will remain at the correct zero reading. As the load is added, the two pendulums will be deflected from their starting positions, and the equalizing bar will act so as to transmit to the indicating mechanism a displacement which, in a manner, represents the mean deflection of the two pendulums. In this way a weighing scale is obtained which is practically free from changes of balance or weight indication from small shifts of level; for many industrial uses this is a feature of great importance.

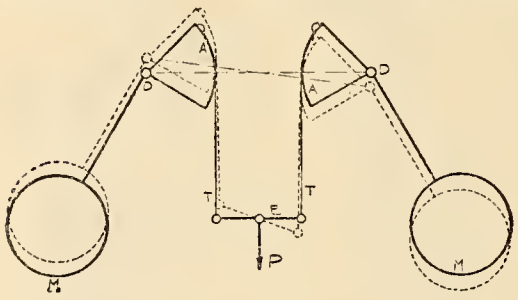

FIG. 4.—Action under a change of level.

(c) CAM SCALES.

A third type of equilibrating element in common use is the cam mechanism, which is an extension of the familiar wheel and axle principle. Essentially, it consists of a pair of cams, on one of which is wound a tape connecting to the lever system and transmitting the load from the platform, and upon the other a tape from which depends a counterpoise of fixed or variable weight. The principle of action of this type of scale can best be illustrated by means of an

example. Figure 5 illustrates in diagrammatic form a simple cam scale. *E* and *D* are cams fixed to the same axis and rotating together upon it. Around *E* is wrapped a tape connected to the lever system of the scale. About *D* is wrapped a second tape from which depends the counterpoise *C*.

If now both cams were circular and concentric, and the center of gravity of the movable structure lay in the axis of rotation, the system would be in equilibrium, provided that the pulls on the two tapes were inversely as the radii of their respective disks. If any additional load were applied through the tape winding on *E*, equilibrium would be destroyed and the system would rotate with an accelerated rate. Such a mechanism would be equivalent to a scale beam in neutral or indifferent equilibrium. It is of little value as a weighing instrument. Suppose now that we replace one of the circular disks by a noncircular cam of form like that shown in the figure, such that its radius of curvature is continually increasing as we pass around its contour. If now any additional force be added to the pull exerted on the tape winding on *E*, the line of pull of the tape winding on *D* will be displaced to the left by the rotation of *D*, increasing the lever arm of the weight *C*. This displacement will continue until the weight *C* acts on a lever arm sufficiently long to enable it to counterbalance the additional force received from the scale platform; the system will remain in equilibrium in this position.

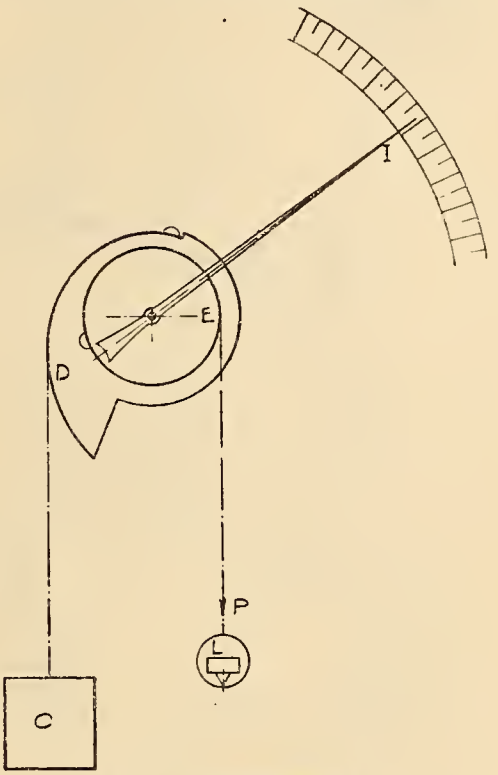

FIG. 5.—Simple cam scale.

If now we attach a pointer *I* to the axis of the cams, we may graduate an arc over which it travels, so that it will read directly in terms of the weight on the scale platform. Thus with any cam contour we may choose, provided only that it is a smooth curve, such that the moment arm of the counterpoise always increases relatively to that of the load as the load is increased, we have a weighing scale, and we may graduate empirically the arc over which the pointer moves. Such a scale would still have the undesirable feature of nonuniform graduation intervals. In order to obtain a uniform spacing of the weight graduations, it is necessary to design the cam for this end, which may easily be done by a graphical layout of the problem. In this connection it may be said that the mathematical solution for the cam contour in scales of this sort is frequently of great difficulty, and in fact has not been obtained for any but the simplest cases; we are forced therefore to resort to the graphical solution, which may be made as accurate as the means available for producing the cam after it is plotted.

The weighing system which has just been illustrated is capable of many modifications. For example, in the figure shown, the fixed counterpoise might have been hung from the circular cam and the force coming from the lever system applied to the spiral cam. Figure 6 shows another variation in which the pull from the platform load is applied through a knife-edge carried in a lever arm attached to the cam. As a further modification, the cam, instead of rotating about a fixed axis, may be so constructed as to roll along a plane or a curved surface, so as to substitute the lesser rolling friction for the journal friction which is present in the examples shown. Such an arrangement is shown in figure 7. Although this scale is simple in its outlines, its operation is somewhat puzzling, but it is believed that by reference to the accompanying diagram its action will be made clear.

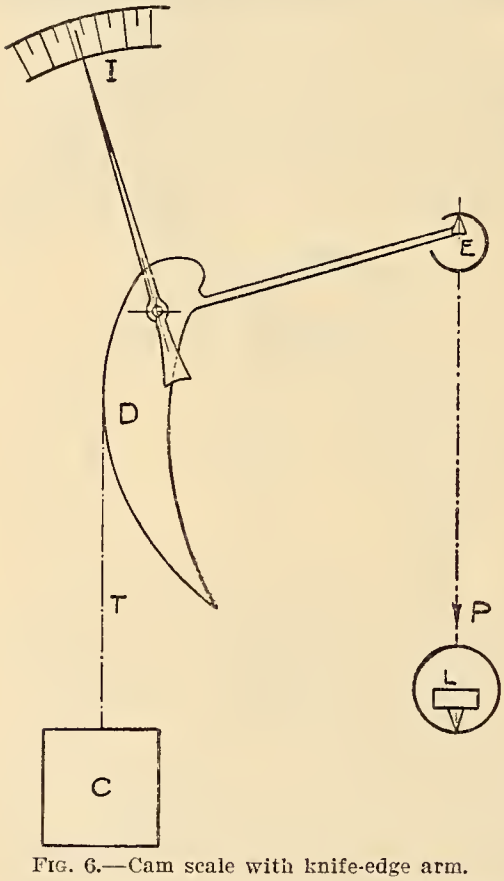

FIG. 6.—Cam scale with knife-edge arm.

The lower part consists of two circular disks of cams, F and G, revolving together and carrying the pointer or dial. About the larger disk G is wound a tape carrying a counterpoise C at its free end. A tape is also wound about the smaller disk F and connects to a similar circular disk D on the upper cam body. On the opposite side of D another tape is wound, and connected at its upper end to some fixed part of the scale frame in such a manner that ED may roll as a whole along plane guides, so that at any instant it is rotating about the line of contact between itself and these guides. Affixed to this upper cam body and moving with it is a cam E of spiral shape, carrying also a tape. This tape connects at its lower end to the lever system which transmits the force coming from the load on the platform of the scale. If we assume the weight of the counterpoise C and the force P are such that the system is in equilibrium, and that then a small additional load is applied to the platform, this equilibrium will evidently be disturbed. The cams E and D will rotate together, rolling upward at the same time along the guiding planes until the lever arm of the force P is sufficiently reduced that the system again comes to a state of equilibrium. The tape connecting to the lower cam will turn it and with it the indicating hand to some new reading. The lower cam body FG is made of such weight that it is in equilibrium under the action of the forces applied through the two tapes which wind upon it. The result is that it floats, so to speak, in its bearings, which therefore offer little fric-

tional resistance to its rotation, but serve only to retain it in position against the action of jarring and inertia forces.

The cam principle, as already outlined, is frequently employed in connection with the pendulum system. Every pendulum scale in which the uniformity of graduation interval is secured by means of a cam and wrapping connector is an illustration of such a combination.

Let us apply this principle of combination still further. It is in fact in many cases difficult to distinguish sharply between cam and pendulum scales. In a pendulum scale having a single pendulum there is generally no cam or only one; in a cam scale there are two, one for connection to a counterpoise and one for connection to the platform levers or weight receiving system. To add the pendulum principle to such a cam system, we need only establish the center of gravity of the cam outside of the center of rotation; then the applied weight of the load is resisted not only by the fixed weight of the counterpoise, but also by the weight of the cam body itself, acting also at a variable distance from the axis of rotation. Thus we have two resisting forces, each obeying a different law, and if we are to have equally spaced graduations, we must make the cam of such contour as to suit the combination of these two effects. Practically this means that in the construction of a scale which is intended to act on the cam principle alone, there should be added a small weight adjustable on an arm extending out from the cam body, so that by shifting the arm and the weight upon it, the center of gravity of the cam body may be brought into the axis of rotation. Conversely, the center of gravity may be intentionally shifted outside the axis of rotation in suitable amount, in order to take advantage of the corrective effect which can thus be obtained.

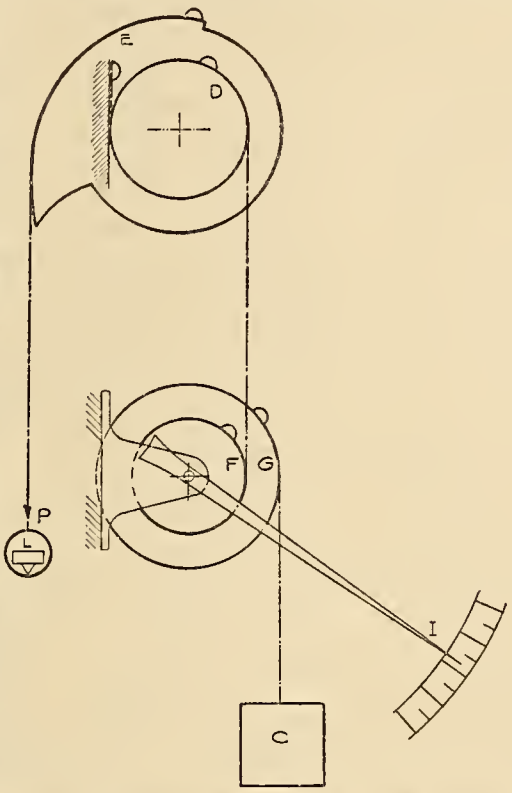

FIG. 7.—Cam scale with rolling cam structure.

III. OTHER PARTS OF THE SCALE.

In the foregoing, I have outlined in a general way the principles applying to the design of mechanisms which perform the equilibration of the load, omitting, it is true, some mechanisms of less immediate interest or of rather infrequent application, which it would be impossible properly to discuss in a paper of this length and scope. I will next take up briefly other parts of the automatic scale. These comprise the load receiving mechanism—that is, the lever system—the indicating mechanism, and certain auxiliary devices, such as the damping and relieving mechanisms.

(*a*) LEVER SYSTEMS.

The lever systems used in automatic scales are in general of the same types as are employed in other forms of weighing scales. The stabilized system is compact and cheap to manufacture, and is therefore in common use in scales of the smaller capacities. It should be remembered, however, that the stabilized scale has certain very decided disadvantages which limit its utility. Referring again to figure 1, which represents a common form of stabilized system, we note that this consists of a linkwork giving parallel motion to the platform. This is the requirement for equal weight indication independent of the position of the load on the platform, namely, that all parts of this platform shall move through equal vertical distances for any displacement of the platform from one plane to another. Now, if we examine the forces which act upon the bearings of such a stabilized system, we observe that it is only when the resultant force combined from the weight of the platform itself and the load applied to it, passes through the line of contact of the principal knife edges at *E*, that the links of the system are free from stresses. If the load is displaced from the center of the platform, there is at once induced a system of forces and reactions in the lever system, which act so as to cause pressures between the pins and loops or knife edges and bearings of the stabilizing links. This pressure must in all cases greatly increase the frictional resistances, and for this reason the bearings of all these links should, if the best results are to be secured, be made as knife-edge bearings like the principal bearings of the scale. If simple links and round pins are used, the amount of the friction is in many cases so large as to have the effect of stopping the oscillations almost at once, this of course being accompanied by a corresponding loss in the precision of the scale.

In order to overcome the objections to the stabilized system, the four-point support method of carrying the platform is employed in all scales of moderate and large capacity. This form of lever system is so familiar to all of us that I will not stop to illustrate or discuss it in detail. Suffice to say that with this construction a parallel motion of the platform is secured entirely by means of vertical reactions, no matter what the position of the load, so that the horizontal pulls and thrusts with their disturbing effect on the accuracy of the indications are eliminated. Of course, the use of this latter lever system involves additional expense, due to the weight and manufacturing cost of the parts, the necessity of adjusting separately the knife-edge distances in the additional lever, and the like; but the result sought can be obtained with great certainty and assurance of permanence.

It must also be kept in mind that, on account of the larger motion of the levers which usually takes place in automatic scales, and for other reasons, the condition and relation of the knife edges becomes a question of greater importance than in the ordinary beam scale. If a self-acting indicating mechanism be attached to a scale in which the levers are subject to considerable bending and settling under the loads applied, or if the knife edges are rounded and worn or have excessive "range" in either direction from the plane, considerable and irregular aberrations are sure to be found in the readings of the scale. This is a point which is beginning to be better understood at

this time, and more and more care is being taken in regard to the alignment and support of automatic scale parts generally.

(*b*) INDICATING MECHANISMS.

In studying the question of indicating mechanisms for automatic scales we find the widest variation in the means employed. If only weight indications are to be given on the reading face it may be of very simple form, as the arc of a circle with the graduations arranged radially, over which swings a pointer rotating about the same center as that about which the reading arc is described. If the pointer is attached rigidly to a pendulum, its arc of motion is necessarily limited to that of the pendulum itself; this angle is commonly under 90°. This leads to the well-known fan-shaped or sector dial. If the pointer is driven through some intermediate mechanism for the purpose of magnifying the motion of the pendulum, the arc may increase to a full circle. If we must have a chart giving not only weight indications but price or other values as well, we may so dispose the indicator that the reading is shown not merely at its end but along the whole length of a radial reference line, and the price indications will be arranged in concentric circles. The chart may be so constructed that the graduations, instead of lying in a plane, are arranged on the surface of some figure of revolution, a greater area being thus afforded for the display of values. In this case it will be desirable to affix the pointer to some fixed part of the scale and arrange the reading chart so as to rotate. The cylindrical and conical drums are examples of this construction. As a matter of fact, even when the graduations are disposed in a plane it is of advantage to make the pointer fixed and the dial rotatable, as, with this construction, the observer who is using the scale need not shift his line of vision in order to follow a moving pointer, but may fix his attention upon a stationary reference line and the region of graduations immediately adjacent to it. With such an arrangement the visual effort required in noting the indications is greatly decreased.

If the pointer or revolving dial is to have a larger arc of motion than, or a motion of a different type from the pendulum, cam, or spring which controls it, some sort of multiplying or modifying mechanism must be introduced. This may consist of a rack and pinion, the use of which has already been illustrated, of a pinion and segmental gear, of a cam and follower, or of a cam with a tape winding about it. In the latter case a simple circular disk will often serve as the cam.

Where tapes are used they should be as thin as possible consistent with the required strength, in order to reduce as much as possible the effect of bending stresses in causing errors in the indications. The tapes should be handled very little, and then only with clean hands or instruments, as the least spot of moisture or foreign material may offer a point for the inception of corrosion. The curvature of the cam around which the tape winds must be nowhere too sharp, on account of the bending effects already referred to.

(*c*) RELIEVING DEVICES.

It is important in the case of scales subjected to hard use, or scales over whose platforms much traffic may pass without being weighed,

to provide an arrestment of some sort, so that the mechanism may be securely locked except at such times as weighings are being made. It is a fact that in many cases a scale will be subjected to more wear from the passage across it of loaded trucks and workmen than from the actual weighing operations for which it is used.

(*d*) DAMPING DEVICES.

When the mechanism of a weighing scale is set in motion by the removal or application of a load, this motion tends to persist in the form of an oscillation, and will so continue until the energy of the vibrations has been absorbed by the resistances opposed, as the friction of the knife edges and bearings, and the resistance of the air. This gradual checking of the oscillations of a vibrating system is called damping. In the case of the ordinary beam scale, it is possible and even desirable to obtain the readings without waiting for the beam to come to rest, since the balance plane of the beam can be very closely estimated by observing the amounts by which the beam oscillates to either side of it.

On the contrary, in the case of automatic scales, in which the indications are observed by the use of a pointer moving over a dial or arc graduated in units of weight, it is necessary that the moving system come to rest as quickly as possible in its position of equilibrium. With some smaller scales, such as hanging pan scales of the spring dial type, the small inertia and relatively high friction of the moving system make it possible for the oscillations to be quickly damped out without the application of any special mechanism for this purpose. In larger scales, however, where the inertia of the moving system is large and the friction small in amount relative to the amount of energy associated with this inertia, a considerable time would elapse before the disappearance of the vibrations, and for this reason an auxiliary device is generally provided to absorb the energy of the oscillations.

Further advantages of such a device are the reduction in the wear of the moving parts, on account of the great decrease in the amount of motion they are subjected to in the making of a weighing, and the partial elimination of the impact stresses and hammering effects due to sudden application or removal of the load on the platform.

In its simplest form the damping device consists of a flat vane or plate attached to some part of the moving system having a relatively high velocity. The resistance of the air which this vane displaces brings the system to rest after a time. In another form of air damper, a plunger is attached to some member of the moving system in such a manner that it passes into a cylinder closed at one end, into which it fits with a clearance sufficiently large that no actual metallic contact takes place. When the weighing system of the scale is set into oscillation the movement of the air which is displaced by the piston must take place through the narrow annular space between the piston body and the walls of the cylinder, and the resistance opposed to this motion of the air provides the damping force. If a still greater frictional resistance is needed, it is customary to use a denser medium than air, as a viscous liquid like oil or glycerin. Axial holes may be drilled through the piston, and the leakage of the liquid will then take place chiefly through these holes instead of around the periphery of the piston. It is easy to add a means of adjustment so that the number or area of the holes open to the passage of the liquid may

be changed at will, thus affording a means of varying over a considerable range the amount of damping to be afforded.

The accompanying figure 8 illustrates the characteristics of the variable amount of damping obtainable with such an adjustable dashpot. The curves shown were drawn photographically by a spot of light reflected from a mirror mounted on an oscillating lever of the scale, which was in this case a small computing scale of the pendulum type. The photographic paper was mounted on a vertical drum revolved at constant speed by an electric motor. This method of graphical delineation of the oscillations of scale levers I am using also in an investigation being made on lever scales of the non-automatic type to determine the laws which underlie the damping of their oscillations and the nature of the frictional resistances. In this case the platform of the scale carried a load of 6.5 pounds, and the system was set in motion by carefully and quickly removing a 1-pound weight. Curve *a* represents the motion of the scale with the dashpot adjusted to a minimum of damping within its range. The horizontal axis is that of time, the vertical that of displacement. It will be noted from this curve that the oscillations persist for a considerable time, and the final reading is not obtained within 0.03 pound (approximately $\frac{1}{2}$ ounce) until 20.5 seconds had elapsed. Curve *b* is taken with the dashpot adjusted to an increased damping, but the curve still crosses the time axis and comes to rest only after crossing it five times. Curve *c* illustrates so-called critical damping; that is, damping of such value that the indicator comes to its final reading in the shortest possible time after being released, while yet not passing that reading. Curve *d* illustrates the case of excessive damping, in which the resistance is so great that the indicator approaches its final reading only very slowly. If the scale be damped as much as in the last example, either time is wasted in waiting for the pointer to come to rest or an erroneous reading is obtained by noting the indication too soon.

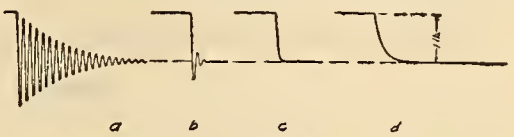

FIG. 8.—Effect of dashpot adjustment shown graphically.

As a rough estimate of the amount of wear which is saved the scale by its being sufficiently damped, I have measured the successive excursions for the curves *a*, *b*, *c*, and *d*, and have given the results in the following table:

Curve.	Time in seconds required for indicator to come within 0.03 pound ($\frac{1}{2}$ ounce) of final reading.	Proportionate distances passed through by indicator on the basis of c=1.
a.....	20.5	25.3
b.....	2.2	2.4
c.....	0.8	1.0
d.....	4.0	1.0

It will be seen at once that for the condition represented in *a* the moving parts operated through 25 times the distance they did in *c* and were subjected to wear in the same proportion.

For the reason already mentioned the dashpot should, whenever possible, be inserted in the scale mechanism between the lever system and the indicating mechanism, as by this means the shocks and jars incident to the use of the scale are prevented from acting with their full effect upon the more delicate and more carefully adjusted parts of the scale mechanism.

The attention of purchasers and users of automatic scales should be called to the necessity of insuring for such scales careful installation on rigid foundations, and of providing for their life and accuracy by affording them the proper care, and by supervising the conditions of their use.

It seems certain that in the future automatic scales will find continually widening application in mercantile and industrial service, while modern methods of design and manufacture are sure to bring forth refinements in construction and extensions in utility.

(At this point of the proceedings Dr. Stratton assumed the chair.)

DISCUSSION.

The CHAIRMAN. Gentlemen, you have heard this paper. Are there any questions you wish to ask the author?

Mr. DOWER. Mr. Chairman, I would like to ask the speaker whether the grain hopper scale or the grain automatic-dump scale is, in his opinion, more accurate in weighing grain, assuming both scales are in standard weighing condition?

Mr. SCHLINK. That is a question which it would be impolitic to answer. I do not think it would be fair at this time to take either type of scale and pass an opinion on its suitability for the purpose.

The CHAIRMAN. I am very sorry it was not my privilege to hear the previous papers on the program this morning, but they are all along the line of work which has been too much neglected in this conference in the past. Even this year the program committee had hard work to get this class of papers. If we are better posted as to the underlying principles and the facts involved in this apparatus, the problem of making regulations, the problem of inspecting, the whole duty of the official becomes very much more simplified and very much more just. I want to emphasize the fact that these are the problems which are most important. We should in the future give more attention to this class of work.

I am going to say, on behalf of the program committee, that they will welcome the offer of definite papers, either along technical or administrative lines. What we want is well-prepared papers, written by those who have had the experience and who know, and papers which bring up a definite topic for discussion afterwards. There has been a decided improvement in the character of the meetings in that respect during the past few years, but there is still room for improvement.

I am asked to say that copies of the Tuttle Barrel Act and the Ashbrook bill can be secured at the end of the session.

There is present a representative of the Western Fruit Jobbers' Association, Mr. William M. Roylance, who has a matter of importance to present.

REMARKS BY WILLIAM M. ROYLANCE, REPRESENTATIVE OF THE WESTERN FRUIT JOBBERS' ASSOCIATION OF AMERICA.

Gentlemen, the Western Fruit Jobbers, as you know, sent me as their representative to this conference a year ago and I stated at that time that the object of the association was standardization of weights and measures. The hated middleman, of whom I happen to be the representative, is the man who gets the odium of all this short weight and short measure, of which we hear so much in the magazines and newspapers generally. Mr. Fischer and Dr. Stratton and others here promised that they would take the initiative in seeing that some national standardization was had before another year, or in about that time. That standardization, so far as the cranberry and apple barrels are concerned, has been put through Congress and is now a national law. The Western Fruit Jobbers, through their secretary, received from Secretary Fischer, upon request, another bill and it struck the organization so favorably that I was sent here to stand behind and recommend that this bill, if possible, be indorsed by this conference, and then the organization of the Western Fruit Jobbers' Association and the International Apple Shippers' Association will get behind the bill through their Congressmen, who are from nearly every State in the Union, and will try to obtain national standardization.

With your permission, Mr. President, I would like to read the proposed bill for information and reference and it can then come up in its regular way.

(Mr. Roylance read the bill referred to, as follows:)

A BILL To prescribe the manner of sale of various commodities.

Be it enacted by the Senate and House of Representatives of the United States of America in Congress assembled, That it shall be unlawful to offer or expose for sale, or to purchase or sell, or offer to purchase or sell, in any State, Territory, or the District of Columbia, except for immediate consumption on the premises, liquid commodities in any other manner than by weight or liquid measure, or commodities not liquid in any other manner than by measure of length, by weight, or by numerical count: *Provided, however*, That nothing in this section shall be construed to prevent the sale of fruits, vegetables, and produce in the standard barrel containing seven thousand and fifty-six cubic inches; or, of berries and small fruits in boxes or baskets holding sixty-seven and two-tenths cubic inches, thirty-three and six-tenths cubic inches, or sixteen and eight-tenths cubic inches; or of vegetables and fruits by the head or bunch which have been usually sold in this manner, or other nonliquid commodities which are and usually have been sold by the package.

For the purposes of this section the term "commodities not liquids" shall be construed to include goods, wares, and merchandise which have heretofore been sold by measure of length, by weight, by dry capacity measures, or by numerical count, or which are susceptible of sale in any of these ways.

SEC. 2. That rules and regulations not inconsistent with the provisions of this act shall be made by the Director of the Bureau of Standards and approved by the Secretary of Commerce, for the purpose of carrying out the provision of this act. The Bureau of Standards, in the enforcement of this act, shall work in conjunction with local sealers of weights and measures or other officers of the several States and Territories appointed to enforce the laws of the said States and Territories, respectively. The latter officers, when enforcing the provisions of this act, as described above, shall be governed by the said rules and regulations.

SEC. 3. That any person guilty of a violation of the provisions of this act shall be deemed guilty of a misdemeanor and shall be liable to a fine not to exceed $500, or imprisonment not to exceed six months, in the court of the United States having jurisdiction.

Mr. President, when the time comes for discussion of legislation I will ask for consideration of this bill.

The CHAIRMAN. We have one or two announcements. I have to report that the final report of the committee on tolerances and specifications will be ready for distribution at the close of this meeting.

The delegate from the Philippines has reported with a good-sized package of cigars which he wishes sampled. The delegate has set a very good example.

REPORT OF COMMITTEE ON CONSTITUTION AND BY-LAWS AND DISCUSSION THEREON (CONTINUED FROM SECOND SESSION).

The CHAIRMAN. Gentlemen, if there is serious objection to any points in the by-laws, we do not want to run over them, but, otherwise, let us proceed as rapidly as we can. Mr. Sherman will again read the article we were considering when we adjourned yesterday, which was Article II, old Article III.

Mr. SHERMAN. The new Article II reads as follows:

> The dues of this association shall be: Members, $1 per year; senior members, $5 per year; honorary members shall pay no dues. Dues shall be payable in advance on attendance at the annual conference of the association on the first day of the meetings, and no active participation in the meetings of the conference shall be allowed to any member or senior member until his dues for said conference are paid.

The CHAIRMAN. If there is no objection, we will pass to the next article.

Mr. SHERMAN. Article III, former Article IV, reads as follows:

> Any member of this association may be suspended by a two-thirds vote of all the members present at any regular meeting. Members may be suspended for unbecoming conduct, refusal to pay dues or assessments, or other misdemeanor. Members suspended may be given a hearing by appealing to the committee on qualifications for membership in writing, and a two-thirds vote is necessary to restore any suspended member to the association.

Mr. FARRELL. Is not that covered by the constitution?

Mr. SHERMAN. No; it is not. The constitution provided only one means of suspending a member. The constitution, in dealing with the committee on qualifications for membership, provides means for expelling or suspending a member, but this states that if the sense of the meeting is that a member should be suspended at any meeting by a two-thirds vote of the members present the member shall be suspended. That was passed last year.

Mr. FARRELL. I think the proper procedure for all this matter would be to turn the constitution and by-laws over to some attorney who is familiar with the formation of associations and incorporations and have him go over this before any further action is taken. The matter now is rather complicated, and the delegates have been up to this time practically unable to read it. I, for a few moments last evening, saw a copy of the by-laws, but was unable to procure a copy of the constitution, and I think we are getting mixed up between our by-laws and our constitution. I offer that merely as a suggestion.

Mr. SHERMAN. I want to call attention to the fact that there is no conflict in this section whatever. This section is exactly as it was adopted last year, though instead of having a right to appeal to the executive committee the right is given to appeal to the committee

on qualifications for membership, it being a membership matter. That is the only change from last year, and if you change it to any other way you are changing the section as adopted at the last meeting.

Mr. SWEENEY. Under this provision if some member of this conference would move that a member be expelled, and there was a two-thirds vote, he would be expelled immediately and be given no opportunity at all to protest against the action. All that is necessary is for some one to make a motion and the vote is taken. I do not think that is right. I believe if a member is guilty of something contrary to the rules of the association, there ought to be a complaint made against him and he should have some opportunity of defense. Everyone has that in every court of the United States, and we should have that here. I believe it ought to be laid over and the matter given very serious consideration.

Mr. FARRELL. I move you, sir, that this conference disagree with the report of the committee on constitution and by-laws so far as this section is concerned.

(The above motion was duly seconded.)

Mr. SHERMAN. I will gladly strike this section out of the by-laws. Your committee does not recommend it, but felt in duty bound to put it in, in view of the fact that it had already been passed last year. Personally, I will be glad to see it stricken out.

Mr. BRENNAN. I think this matter is not of sufficient importance to occupy our attention a great while. I think it would be entirely safe to leave that matter with this conference. I do not believe two-thirds of the men here are going to expel any person unless he deserves to be expelled. I do not know any body that is not to be the judge of its membership. This body should be the judge of its membership. If there is any man here whom two-thirds of this conference do not believe should be here, he should be put out. Why should he have a hearing? That is not usual in constituting a membership in a body of this character. If some rights are inherent in an office, that is quite another thing, but such a body as this should be the judge of its own membership, and I think it is entirely safe to leave this right here. Suppose this conference should expel me? What could be done? Are we to have a hearing before I go out? I think it is entirely impracticable, and I think it is entirely proper to have here that power; and no person will ever be injured by a by-law of that kind so long as the membership is up to the standard. I do not think it is of great importance.

The CHAIRMAN. You have heard the motion and second to omit this section, and unless the vote is close we will not call for the roll, but just for the ordinary vote. Those in favor of omitting the section please indicate by saying aye; contrary, no.

(The motion was agreed to.)

Mr. SHERMAN. Article III of the by-laws, which was formerly Article V, is as follows:

ARTICLE III.

Should any controversy arise which is not included in the rules of order hereto attached, general parliamentary law shall govern the presiding officer.

ARTICLE IV.

Amendments to the by-laws may be made in accordance with the rules laid down in Article VII of the constitution.

RULES OF ORDER.

1. The president, or in his absence the vice president, shall preside at all meetings of the association.
2. The president shall have the right to take the floor in any debate on any subject under discussion after calling to the chair the vice president or some other member he may select.
3. After a meeting has been called to order members shall be seated and shall not speak or otherwise interrupt the proceedings till given permission by the presiding officer.
4. No member shall speak on any motion more than twice without permission from the chair, nor shall any member speak more than five minutes at any one time unless given permission by a majority vote of the members present.
5. Should two or more members address the chair at the same time, the chair shall choose the one who, in his judgment, is first entitled to the floor.
6. When a member is called to order by the president, or by any other member, he shall at once resume his seat pending the decision on the point of order raised. Every question of order shall be decided by the president, subject to the appeal to the sense of the meeting.
7. No motion shall be debatable until it has been seconded.
8. Appeals and motions to reconsider or to adjourn are not debatable.
9. When a question is under debate, no motion shall be received, except to lay on the table, postpone, commit, or to amend.
10. No member shall interrupt another when speaking, except to call to order, as prescribed in rule 6, or, with the permission of the member speaking, to ask a question relevant to the subject.
11. A motion to adjourn shall always be in order, except when another motion is being voted upon, provided the member moving adjournment has properly secured the floor.
12. When a motion shall be moved and seconded, the mover thereof may be called upon by the president or any member to reduce the same to writing, from which it will be read by the secretary.
13. The mover of a motion shall be at liberty to accept an amendment thereof, but, if an amendment be offered and not accepted, yet duly seconded, the association shall pass upon it before voting upon the original motion.
14. When a motion to adjourn is carried, no member shall leave his seat until the president shall have left his.
15. Every officer, at the end of his term of office or service, shall deliver to his successor any moneys, papers, documents, books, or any other records under his charge and belonging to the association.

ORDER OF BUSINESS.

The order of business shall be determined from conference to conference by the executive committee, subject to the approval of the president, in order to secure the most efficient utilization of the time of the conferences.

ARTICLE V.

These by-laws shall be in effect immediately upon their passage.

The CHAIRMAN. Unless there is objection, the by-laws will stand approved.

Is there any objection to the order of business? If not, it stands approved. Before you adjourn, I want to state that a number of the city officials have asked to be heard, and I think it is quite proper that they should be, and some time during the meeting time will be found to hear something from the city and county officials. Our only object in cutting it out for the first day was lack of time, and we have been criticized a good deal before for listening to these official reports. Personally, I have always been in favor of them. There is nothing I like to hear any more than the experiences of an official, whether he represent state, city, or county, and have him tell what he has come

across in his locality in the past year. I think it is very instructive, and time will be found during the meeting for those officials to tell us of their experiences.

Mr. ALBRECHT. Would it not be better if there was a motion passed to adopt the by-laws as a whole before we adjourn?

The CHAIRMAN. The ruling is that it is not necessary.

Mr. FARRELL. Would it be possible before the business meeting on Friday morning to procure a copy of the constitution as adopted?

The CHAIRMAN. We will try and have that stenciled to-morrow. The fact is this would have gone off much more smoothly if we had had the constitution stenciled in plenty of time, and this delay was due to a hitch in the clerical force.

Mr. VANDUYN. Since our congenial friend from the Philippines has come to us with a large number of boxes of cigars, I think it will necessitate having a resolution committee, and therefore I move that the chair appoint a resolution committee.

(The motion was seconded and agreed to.)

Mr. HOWELL. Would it be possible for us to have the remarks made by the Secretary of Commerce and ourselves prepared so that we can take them back with us when we go? They are of great use to us in our districts to give to the press, and it would be a big help to have them instead of waiting a year to get them.

The CHAIRMAN. I might not be able to get them immediately, but I will get a copy of Secretary Redfield's remarks in a day or two and have it duplicated, and if it is not ready by the time you leave I will have it sent to you shortly. I believe, however, it can be distributed before you leave. I am very pleased that you have asked for that. We have not had a Secretary since the bureau has been established who has taken as much interest in the working of the bureau as the present one. All of our past Secretaries have been interested in the bureau and helped us in the formative stage, but the present Secretary has been a manufacturer all his life and is acquainted with technical matters of the bureau and is going to do everything he can to help you and help the business conditions of the country. If there is no further business this morning, a motion to adjourn is in order.

Mr. MCGROARTY. Mr. Chairman, I move that we now adjourn.

(The motion was seconded and agreed to.)

(Thereupon, at 12.15 o'clock p. m., the meeting adjourned to meet the morning of Thursday, May 27, 1915.)

FOURTH SESSION (MORNING OF THURSDAY, MAY 27, 1915).

The conference reassembled at 10 o'clock a. m.

The CHAIRMAN. Gentlemen, I am very glad to see that so many of you have survived yesterday afternoon's recreation and I hope that it has left us all in a good humor for this morning. At the meeting on yesterday afternoon, in talking with a large number of the delegates, I found that several things were misunderstood, and I think that there are some things that ought to be corrected. One question of importance is the form of the invitation that was issued, and we are perhaps to blame for that. Things ought to have been made a little more clear.

The second question is the complaint on the part of some of the manufacturers, as well as the sealers, that they did not get the report of the committee on tolerances in time to get their criticisms back to us. In that I agree; I think the point is well taken.

The third was that the proposed constitution and by-laws were not submitted in time, and in that I agree. I have this suggestion to offer. The original committee appointed for that purpose were, in so far as we knew, handling matters all right, but they found it impossible to get together, a fact we did not know of until a week or 10 days before this convention. At that late moment it was necessary to take immediate action in regard to this question or we would have had nothing at all before us in that respect. That, I think, has been misunderstood. There has been no conference with the committee, so far as the bureau is concerned; the committee has handled this themselves, and Mr. Sherman was appointed as a substitute to report. If there is a feeling that there has been any attempt whatever to put a thing through too quickly or that it has not been carefully considered, then my advice to you is to put the matter off entirely until another year.

I want to say frankly we spend too much time in discussing and wrangling over things of that kind. I long to see the day when this convention comes here to study and take up matters of administration. Those are the things that we want to do in order that each man may improve his work. I think I have made our position clear on that and, so far as I am concerned, I feel pretty sure every official is broad enough to look at it in that way and to give another year for consideration.

In regard to the matter of tolerances, the matter is absolutely open, and if there is a single point not well understood it is open for discussion. I suggest when you come to the matter of discussion of tolerances that you take it up point by point. What you all want to know is, what is the right tolerance in every particular instance, and we want to get the advice and experience of everybody here on that matter. Those are the things we want to get at and they should be discussed point by point, and if there is any point on the whole

matter which has not been sufficiently considered or there is not sufficient time before you, put it off.

I have put our cards absolutely on the table, and I will entertain a motion from any State official who voted on this matter to reconsider the whole proposition of constitution and by-laws.

RECONSIDERATION OF REPORT OF COMMITTEE ON CONSTITUTION AND BY-LAWS.

Mr. HARTIGAN. Mr. Chairman, this is my first time to appear in the conference, as I was detained in New York, Philadelphia, and Baltimore on account of illness on the way over. For some reason I was very quickly apprised of the situation in connection with the proceedings of last Tuesday in relation to the adoption of the constitution and by-laws, and it seemed as though there was a discordant note and plenty of inharmony among the delegates, whereas in the past everything has been harmonious, pleasant, and merry and progress has been made along scientific and technical lines, and questions have been void of matters politic and personality. In order to get this matter before the convention in regular form, and coinciding with your own views and your expression of broadness and liberality in treating of this question, I rise on a question of personal privilege, the question being that I be recorded on the poll of the vote adopting the constitution and by-laws of the association in the affirmative. I intend to follow that with a motion to reconsider the constitution and by-laws.

(The above motion was duly seconded.)

Mr. SHERMAN. Mr. Chairman, I think it is up to me as a member of the committee to call attention to two or three things here. In the first place, I wish to call attention to the fact that this action now proposed would throw us back into the chaos of years past and do away with what promised to be a foundation from which we could work in the future. This motion is being offered and action is being taken a great deal quicker and with a great deal less consideration than was the case with the preparation of this constitution and its adoption.

In the second place, I wish to call attention to the fact that this constitution and these by-laws were adopted by over a two-thirds vote on every question where a vote was taken of all those delegates present who had a right to vote under the original agreement under which the convention was called. It seems to me, then, that the only ground on which we can entertain a motion to reconsider would be that those persons who voted for the constitution want to change their vote. The opposition seems to be entirely among persons who had no right to vote. This constitution was presented by your committee because your committee believed that it was high time to put on a par with the State men a number of the men from the larger cities. Under the old régime a city like New York, Philadelphia, or Chicago had no vote in any case. Your committee felt from the start, and thinks now, that it was a great gain when that privilege was extended to the larger cities.

To throw this matter out now will mean that for another year the large cities will have no vote except by courtesy of the State men, and your committee thinks that would be unfortunate.

The CHAIRMAN. Gentlemen, if you are determined to have this wrangle, we will have it out; but it is absolutely unnecessary, because some gentleman or State official who voted in the affirmative the other day must move to reconsider.

Mr. HARTIGAN. I have just voted that way.

The CHAIRMAN. At the time that vote was taken you would not have been eligible to vote.

Mr. HARTIGAN. I understood I would be, being from a city of over 300,000.

The CHAIRMAN. That assumes this is adopted.

Mr. HARTIGAN. I arose to a question of privilege.

The CHAIRMAN. The Chair will have to rule you would have been ineligible for vote at that time.

Mr. RICHARDSON. This organization has been in existence for 10 years and we have run all that time without any constitution and by-laws. I am opposed to any reconsideration of our constitution and by-laws, but I would be willing, if there are any members who object to any section of our constitution and by-laws, to offer an amendment, and if they were amendments agreeable to the legal advisers in this body they might be adopted, otherwise they would be objectionable.

The CHAIRMAN. The objection is that sufficient time had not elapsed, that they had not time enough to consider this. Therefore if they have not had time to consider the situation it applies to it as a whole and not to any paragraph.

Mr. REICHMANN. Mr. Chairman, I rise to a point of personal privilege. I seconded Commissioner Hartigan's motion in a perfunctory way, not knowing what this situation was. I arrived here only this morning and I do not know definitely whether or not the constitution has been adopted. The committee was appointed year before last and last year the suggestions were made. I came down here on the invitation of the Bureau of Standards, which was sent out to the governors of the States. The governor of the State of New York appointed official delegates; I believe he appointed two, the superintendent of weights and measures and myself, and acting upon that authority I naturally accepted Commissioner Hartigan's motion, but, as I understand from the chairman of your committee on constitution and by-laws, the Chair should not have recognized my second. Is that right, or was I entitled to a vote?

The CHAIRMAN. I did not hear who the second was from.

Mr. EGAN. Mr. Chairman, I do not believe that we want to spend a great deal of time on technicalities. So far as my observation goes, I am convinced that every member of this conference wants to act fairly. I voted for the adoption of that constitution, and without any more waste of words, having voted in favor of it, I move a reconsideration of that whole subject.

The CHAIRMAN. Is there a second to the motion?

(The motion was duly seconded.)

The CHAIRMAN. We have had a motion and a second from State officials who voted for it on yesterday. You have heard the question. Are there any remarks?

Mr. GOODWIN. Mr. Chairman, I do not think it is the fault of any of the members of this organization who have passed on the constitution and by-laws that some members were not present at the time

the action was taken. I hope this motion will not be passed. I want to be liberal, and there are sections in those by-laws that I do not approve of, and I think we are on dangerous ground. I think we have established a dangerous precedent by going out of the State organization, away from the representatives of the States. We all have our constituents and our organization, and as the representative of that organization I am here from the State of Rhode Island to protect our interests as well as all the delegates of the other States are here to protect the interests of their several States. If I had had the misfortune, through any cause, not to get here on time, it seems to me it is up to me, it is my fault, no matter what the conditions were.

The CHAIRMAN. I think I can correct that. I think the State delegates were all here on Tuesday.

Mr. GOODWIN. Then why should we reconsider this bill we passed here on Tuesday? If it was satisfactory then why is it not satisfactory to-day? We should not have passed it until it was satisfactory to us, and, therefore, I hope that the motion will not prevail.

Mr. REICHMANN. Mr. Chairman, I have attended every national conference on weights and measures from the first, with the exception of one, and that was when Mr. Sulzer was governor for a brief period of months. At the first meeting there were only a handful of State officers here; that occurred at the second, third, and I believe the fourth conference.

The executive committee, of which I happened to be a member from the beginning for several years, adopted a resolution to ask all weights-and-measures officials throughout the country to come to this conference. I think the record will show that there has never been a vote taken in which only the State officers were allowed to vote. I take it that this is not a session of State officers of weights and measures. The term has been used, "State delegates." I am a bona fide State delegate; I was not here on yesterday and it may be my fault, as the gentleman from Rhode Island says, but there has never been any lack of harmony, and if this conference is going to accomplish results the first thing which you must have, as Commissioner Hartigan emphasized, is harmony.

Inasmuch as all these gentlemen have been invited here, why not reconsider that motion and, in a spirit of fairness, let every member have a copy of the proposed constitution, and, as the chairman suggests, let them vote on it next year. One year's delay will not mean any harm.

I think it is exceedingly bad to have this sort of discord come in and distinctly understand this has never been, and I personally hope it never will be simply a small organization or upper house, if you please, of State weights and measures officials and officials of large cities. Believe me, and I am speaking from experience, that there are a great many city and county sealers throughout this country who can give a lot of State officials good information, and who can give it to the Bureau of Standards, and, vice versa, the Bureau of Standards can give them information, and the bureau wants to give it. Now, do not let this conference discourage the weights and measures officials of the smaller places who are working earnestly to do something for the benefit of the general public.

Mr. BRENNAN. Mr. Chairman, this is exceedingly unfortunate. The gentlemen who have spoken here, and who have arrived this morning for the first time, surely do not understand the situation. It is an enlargement, instead of a curtailment, of the voting privileges. Every member, every little sealer of weights and measures throughout the country can come here and participate in the proceedings of this organization; they can speak on every question; they can be on every committee; and they can vote on every question with the exception of that of tolerances and of legislation.

That provides that a little crowd, or a large crowd, if you please, of Maryland and District of Columbia voters can not come in here and run this convention on the matters of tolerances and of legislation.

Mr. FARRELL. I do not care to take up the time of this conference with any long speech on the question of whether or not we should reconsider our vote. We came here fundamentally to help each other, to learn from each other, and it may be to meet each other. I understand that the bird has been twittering in the trees that the State of New York was going to pack the convention. The State of New York, gentlemen, is too big, and I trust the superintendent of New York falls in the footsteps of the State, to enter into any petty wrong. We have too much to do. The question of weights and measures in the State of New York is second to no question there. The work of the department is such that we are all busy all of the time, and we have not time to enter into political discussions or any petty ideas of packing conventions or doing any such thing as that. We are here to learn, we are here to help, if possible, and I suggest that inasmuch as we have gone on for 10 or 12 years without any constitution or any by-laws, that there is no necessity for this conference to have any constitution and by-laws; but, if we are going to have it, let us have them printed; let us study them beforehand.

The CHAIRMAN. The question is called for, but I do not want to cut anybody off.

Mr. FARRELL. Mr. Chairman, I would like to ask how this is going to be voted on?

The CHAIRMAN. We will call for the vote of the gentlemen who settled this matter previously—the State delegates.

Mr. SWEENEY. Are the county and city officials privileged to vote?

The CHAIRMAN. No.

Mr. SWEENEY. Has there been any ruling in the past by the chair or has there been any law adopted in any way to prevent the county and city sealers from voting upon all questions that came before this conference?

The CHAIRMAN. We have never discussed questions of this kind before.

Mr. SWEENEY. Last year the county and city sealers present voted on every subject before this conference; their votes have done no harm to the conference; they have done no harm to the weights and measures proposition throughout the country, and I feel that every man of these men representing Pennsylvania is just as competent to vote on that question as I am, and some of them a great deal more so, and I do not believe it is fair to leave us out.

I have a letter from the secretary of this association asking me to bring as many inspectors as I could to attend this conference. In

addition to that the officers of this conference wrote to the county commissioners of our State and to the mayors of our cities asking them to send delegates to this conference. I do not believe it is fair when they go to the expense of sending delegates to disfranchise them and prevent them from voting on questions that affect the whole people of our State.

The CHAIRMAN. The chair ruled on yesterday that this adoption of the constitution was a privilege which belonged to the State officials, and I must rule the same way to-day. I have talked with a number of the State delegates and you are not going to lose a thing at all, because I believe that most of the State delegates feel, as I do, that we can not afford to have this considered preemptorily. If that accomplishes what you want, why string the matter out in this way?

Mr. HOWELL. I just want to say a word to explain my vote. I voted my conviction day before yesterday, and I am prepared to vote the same way to-day but for the fact that the president has requested the matter be laid over one year, and I will, therefore, vote with the majority.

The CHAIRMAN. All those in favor of the question say aye; contrary, no.

(The motion was agreed to.)

The CHAIRMAN. Now, gentlemen, you are where you started. There is nothing back of this and we do not want to get into politics. We must not let the conference get into wrangles of this kind, and I now sincerely hope you will proceed to discuss technical matters.

(Mr. Waldron, of New Jersey, vice president, at this point assumed the chair.)

Mr. REICHMANN. As a matter of technicality, will you please announce the vote.

The ACTING CHAIRMAN. The ayes have it. The motion was to reconsider.

Mr. HARTIGAN. I respectfully move that the report, as considered by the committee on constitution and by-laws, on Tuesday last, be rejected by this conference and a new committee appointed by the chairman to go into power and report back to the conference next year upon a proposed constitution and by-laws.

(The motion was duly seconded.)

Mr. FARRELL. I move you, as an amendment, that a copy of the proposed constitution and by-laws be sent to each of the members at least one month prior to the meeting of the conference.

(The amendment was seconded.)

Mr. HOWELL. Mr. Chairman, I do not think this conference wants to be in the position of criticizing the work of the committee. Might it not be better, Mr. Hartigan, to add to the present committee and let that committee report? I would like to see that amendment.

Mr. HARTIGAN. I heartily agree with the sentiments expressed by Mr. Howell and I am willing to accept the modification so that no criticism will rest on this committee, because I do think they presented a constitution and by-laws which they thought would meet with all future events arising in these meetings. I am glad to accept the amendment.

Mr. VAN DUYN. I am opposed to the motion as put before the conference at this time. It does seem to me that if the gentlemen who come

here at this late day opposing the by-laws and the constitution are not satisfied with them as we passed them the other day, they should bring in some amendments here so that we will know what we are doing. They should not come here with a proposition to do away with this committee which has done such valuable work for this conference.

Mr. BARNARD. Mr. Chairman, I do not think that there is any desire on the part of Mr. Hartigan, of New York, or on the part of any person who has spoken here this morning, to in any way criticize that committee or to in any way embarrass that committee, and I think it was Mr. Hartigan's desire to have this committee appointed to make these amendments, and I think that Dr. Stratton, the president of our association, will see to it that a committee is appointed that will take care of that proposition and that it will be taken care of in proper shape.

I believe that that is the proper way to go at this, and if they see fit, to adopt such portions of the constitution as have been proposed and also to prepare amendments to cover the parts objected to. I think the motion of the gentlemen from New York is well taken.

Mr. SHERMAN. Mr. Chairman, I want to know if the constitution as adopted on day before yesterday by more than two-thirds vote of all those entitled to vote is rescinded or abrogated or laid on the table?

The ACTING CHAIRMAN. It is being reconsidered now.

Mr. SHERMAN. This constitution and these by-laws were on day before yesterday and on yesterday adopted by more than a two-thirds vote, and they went into effect immediately on their passing by the vote of the association at that time and they provided definitely the means whereby any section might be amended. Will you state the motion again?

Mr. HARTIGAN. I respectfully move that the report as submitted by the committee on constitution and by-laws on last Tuesday at this conference be rejected, without criticism upon the committee, and that the present committee be enlarged to five members through appointment by the chairman, and that a copy of the proposed constitution and by-laws be submitted at the next annual conference of this association and be sent to each invited delegate at least one month in advance of the date of the conference.

Mr. FARRELL. My amendment is withdrawn.

(The above motion was seconded.)

Mr. STARN. If you please, Mr. Chairman, the report of the committee on constitution and by-laws was accepted by this conference. I want to ask the gentleman how we are going to reconsider a report that is a matter of the past—unknown—we know nothing of the report, but we have the constitution. If the constitution was good for us on day before yesterday, I would like to ask why it is not good for us to-day?

The ACTING CHAIRMAN. This vote is to be taken by States—by the gentlemen who voted the other day.

This will be an aye-and-nay vote by the State delegates.

Mr. SWEENEY. There is no constitution and there is nothing to prevent every member here from voting.

The ACTING CHAIRMAN. There is a ruling of the Chair that only the State delegates and only those who voted the other day should vote on this?

Mr. SWEENEY. Yes; on the constitution this morning he ruled that those who voted the other day were the only ones entitled to vote on this.

Mr. EGAN. The Chair decided the original motion to reconsider on the aye-and-nay vote of the State delegates. The Chair is deciding now that the vote shall be taken by an aye-and-nay vote of the State delegates. If the gentleman from Pennsylvania denies the Chair the right to decide that question, he ought to appeal and he ought not assert it against the Chair.

Mr. SWEENEY. I simply say that we are in the position that we were one year ago. There is no law or constitution to prohibit any member of this conference from voting upon any subject. We have already reconsidered that and the delegates are entitled to vote upon all the questions before the conference.

The ACTING CHAIRMAN. All those State delegates in favor of the motion say aye, opposed no.

(The motion was agreed to.)

Mr. SHERMAN. I call for a count of the State vote.

Mr. GOODWIN. Before your decision is announced, I rise to a question of privilege. I claim that the representatives of the different States shall have the right to have their names called and they shall answer yes or no.

Mr. SHERMAN. Any member entitled to vote has the right to call for a count of the vote.

The ACTING CHAIRMAN. I am afraid you are too late. The ayes had it in that case.

The next number on the program this morning is a paper by Mr. John H. Sherman on "Weights and measures work from the standpoint of the efficiency engineer."

Mr. SHERMAN. Before starting my paper, I want to apologize to this conference. On account of having, of necessity, been exceedingly busy on the shad-bake activity, selling tickets, and so forth, and also of necessity, against my will, having had to report the action of the constitutional committee, of which I was only one member out of four, it has been necessary for me to be before this convention almost two-thirds of the time we have been in session, and I feel the situation keenly. I think that everyone here ought to be sick and tired of me and the sound of my voice; and for that reason I withdrew my paper from the program and asked to be excused, but the chairman insisted that it be given. Therefore I can only say that I hope you will bear with me through something that will at least be different from anything I have said in the past. That is the best apology I can make.

The subject is "Weights and measures work from the standpoint of the efficiency engineer," the efficiency engineer being a man trained to an entirely different viewpoint, as a rule, from the majority of scientific men.

WEIGHTS AND MEASURES WORK FROM THE STANDPOINT OF THE EFFICIENCY ENGINEER, BY J. H. SHERMAN, SUPERINTENDENT OF WEIGHTS, MEASURES, AND MARKETS OF THE DISTRICT OF COLUMBIA.

So much has been said and written about efficiency, especially in the last two years, by people who have no idea, no conception, of the true meaning of the word, that it is necessary now, before an economic engineer discusses the subject, to carefully clear the ground by defining just what efficiency is, what an efficiency engineer or economic engineer is, and what he is striving to do.

Efficiency is the relation of what is being done to what ought to be done—assuming always that we ought to get the best possible result in proportion to the time, means, and effort invested. Thus, if a machine capable of turning out 100 metal disks per minute be improperly speeded, or awkwardly handled, so that it produces only 70 disks per minute, we say that it is being run at an efficiency of 70 per cent. If this reduction in product is entirely due to ignorance or carelessness of the man who runs the machine, we say that this man is 70 per cent efficient, or his efficiency is 70 per cent.

You will notice efficiency is a ratio. The prevailing idea that efficiency means hard work is entirely wrong. The most efficient man usually is not working hard. The efficient man is the one who gets a lot of return for a little work. From this definition you will also readily see that the common conception of efficiency as meaning strenuosity is far from correct. Most men who are exceedingly strenuous are not highly efficient at all, and the fellow who hustles through his work, consciously hurrying and driving himself and others to greater than normal exertion, or who does for himself work which is already being done by others who would furnish him with their knowledge and experience, never attains high efficiency. He gets out too little of what he puts in. His results are low in proportion to his expenditure of time, effort, and means.

It is for this reason that the constructively lazy man is apt to be the most efficient. He works his brain overtime to devise ways to save effort, and economy of effort is a great help toward high efficiency.

You all know there are two kinds of barbers. One is on his feet as you enter, bowing, twirling his towel, inviting you to a chair. He is very industrious, commendably busy. He lathers your face with short, fussy little whirls of his brush, strops his razor with great speed, energy, and much noise, then shaves you with short, choppy little strokes, two or three times over each half inch, determined to get each hair from at least two directions, each of the two times over. He inquires anxiously whether the razor feels all right—evidently a little afraid it pulls. At the finish you find that his busy methods have taken a lot of time, you are not well shaven, and you are dissatisfied. You escape as soon as possible, tip him as little as possible, and come back to his chair as seldom as possible.

Analyze your dissatisfaction and you will find that the man was inefficient. Busy, strenuous, eager, faithful, industrious; but inefficient. Inefficient because he has never studied his job to find out the disadvantages of the prevailing methods among barbers, and therefore has fallen into a puttering makeshift routine that is ill planned, indecisively executed, and carried out with unnecessary duplication of work.

Every now and then we find the second type of barber. He gets up slowly as you come in and swings lazily across to the chair. He gets there just as you are seated and ready for him. He lathers your face with a few long swirling strokes of the brush; rubs it in with a hand that reaches every bit of surface with a minimum of motion; strops his razor with a couple of easy leisurely swings; and then with one long, broad, easy swipe of the razor he leaves your cheek clean and smooth from ear to the point of the chin. He shaves you with one-fifth as many strokes of the razor as the first barber did, and leaves your face smoother. He doesn't ask how the razor feels, because he knows it's all right. When he is done you find that his leisurely method has saved a lot of time. You feel good. You tip him well because you want to. And you come back to him with pleasure.

That man is efficient. He gets the maximum of result with the minimum of effort. He has thought about his job enough to break away from the old ways and plan his work so that results shall be accomplished with no waste of time or energy, and with no duplication of work.

Now the efficiency engineer is one whose guiding ideal is the elimination of waste—whose life work is the task of assisting in the educational movement which is to make all men like the second barber, all methods efficient and wasteless as the second barber's methods are. And the efficiency engineer goes further. He insists that every job should be done, not only so as to yield the maximum result with the least possible effort, but also so that the greatest possible amount of good, direct and indirect, shall result to the benefit of society as a whole.

Now, when a man trained for this work and obsessed with this view comes into weights and measures work, he finds many conditions and practices existing which are difficult to reconcile either with his own principles or with the best prevailing business or moral ethics, but which seem to be generally accepted as part of the sealer's routine, and for the larger part pass unquestioned, simply because the work early got accidentally started that way and as yet we have not had in the work enough of technically trained men to alter the methods set by precedent, or enough men with a sense of humor to laugh out the absurdities.

It is impossible, therefore, to talk on this subject from the viewpoint of the economic engineer without appearing almost unduly critical. Yet I have courage at the outset to undertake it, because I know that at each point at which I appear to criticise I will find the progressive thinkers in sympathy with me.

Passing now to the practical aspects of weights and measures work as at present conducted, the engineer has but three questions to ask at each point: First, what is the end we are striving for? Second, are we working along the line best calculated to attain that end? Third, if we are not on the best track, or are not progressing as we should, what can we do to remedy the condition?

The first question that should occur to the new sealer, if he have a proper consciousness of duty, is "What am I here for? What is the object of this work?" He finds in answer that he has become one of a large organization existing for the purpose of securing a square deal, with just weights and measures, to both parties, in every deal,

at all times, and everywhere. Also, that his own direct activities are centered on the task of securing a square deal to both parties in every transaction involving weights or measures within his own small jurisdiction. He learns further that his work finds status and authorization, not only in modern statutes and the old common law, but also in the laws of ancient nations and in the earliest code of religious and moral laws of which we have record—and in spite of these facts he finds that the work is still in its most elementary stages in this country, and that manifold difficulties confront him in the effort to properly perform his duty to his public. Eager to better his service, he studies the performance of other departments and older officials, attends State conferences, confers with his superiors, and attends the national conference.

If he be a thinking man, the effect must be disheartening. He finds little cooperation, and less of mutual confidence. Little work that shows continuous policy; and less that is constructive in its nature. Shortages of working force, facilities and appropriations everywhere; yet duplication of work on every side. Offices over-equipped; and field kits defective. Good laws well enforced in one territory, stultified in their effect by defective or poorly enforced laws in adjoining jurisdictions.

Many phases of the situation are faulty. The faults are of three classes.

The first class of faults are those which are due to poor local legislation; to failure to analyze the precedents established by predecessors in office; and also to a failure to read human nature. First among the difficulties that face the average sealer, I believe, will be found a shortage of appropriations, shortage of working force, and shortage of equipment. Why? Primarily because the legislative body to which he must appeal has not responded to requests for increased appropriations. Why not? Largely because men in all classes of life are more willing to pay for something they expect to get than they are to pay for something they have already received and utilized. The sealer, as a rule, has in the past appealed for increase of force, for better equipment, for better legislation, by pointing out how well he has done with what he has. What is the answer? The answer is immediate and prompt, "This fellow is doing very well. What he asks for will cost a lot of money. He says he gets good results for what we are spending. We had better let him alone." What is needed now all over the country is a stirring up of intense dissatisfaction with weights and measures work as it exists. When we can make people feel they are not being served well enough, and that they can get busy and criticize and have something better put through, then we can expect enlargement of force and increases of appropriations. We need the man who will come out and say frankly, "I am doing rotten work and I know it, but it is the best that can be done with the force and facilities you have given me. The public needs better service. Either give me the appropriations needed, or throw me out and put in somebody you are willing to equip properly." He will not be thrown out.

Second, with regard to inspection, he will find, if he investigates, that the doubling of the capacity of the test, the increase, for example, of the test of a 5-ton scale, from a 1,000-pound corner test to a 2,000-pound corner test, will result in great increase of con-

demnations. The sealer is not working to get a large number of condemnations, he is sorry when he condemns a scale; but when he condemns a scale he condemns it because he finds that it is not giving good service to the general public, and the doubling of the range of the test is the only means by which he could have detected and stopped this injustice to his public.

Now, in doubling the test on heavy scales, or making the tests on 60-pound scales 60 pounds instead of 30 (as is the case in most jurisdictions), or in testing up to the full 1,000 pounds on a 1,000-pound scale, the sealer secures greatly improved conditions in his territory, but in doing this he must greatly reduce the number of inspections made per year, and by so doing he reduces the revenue from fees collected. This makes his paper record look poor. Records will show very quickly an increase or reduction in revenue collected, but they can not be relied upon to show all the advantages which the public gets from an improved standard of scale performance.

Immediately the sealer faces this problem: Shall he take the course that he knows is for the good of his public, taking his chance on fighting down the opposition and criticism which he knows will assail him, or shall he play safe and keep his paper record good?

I think it will be agreed by everyone here (and certainly by all those who have been freed from hampering restrictions in their own States), that it will pay every man who possibly can do it to break loose and make the fight. In the long run the sealer is going to be judged by the trade conditions that exist in his territory. A hundred people will buy groceries and coal to every one person who ever thinks of the paper record, and the sealer is successful when those hundreds are well served and contented.

Twelve coal scales, of capacities ranging from 10 to 25 tons, were tested in the District of Columbia not long ago—tested exceedingly carefully with a 1,000-pound corner test, and all brought to within nearly the same range of error. We then ran a load of approximately 6 tons on each of these scales in turn and noted the variation in the weights recorded on the different scales. All were different. There was no way to know which one was correct, but we did know that only one could be, and the variations were seriously large. Then we increased the test to a 1-ton corner test and again got the scales within the same range of error.

Weighing the 6-ton load again, we now found that doubling the capacity of the test had reduced the range of variation between the scales by about two-thirds. Testing and regulating these scales next with a 2-ton corner test, the uniformity shown under the heavy load was very close. These tests demonstrated so clearly the advantages of the higher capacity testing that the merchants as well as the weights and measures division were convinced that its complete adoption would pay, and the merchants of the District of Columbia are now clamoring for it, and many have expressed a willingness to double the fees paid for tests every time we would double the capacity of the test.

The third trouble is, for most of us, the fee system. In some jurisdictions this has been abolished, but for most of us it still remains a nuisance, a handicap, and a prolific source of petty injustice. I have just mentioned one ill effect of this system—the tendency toward

superficial testing which it encourages. But there are other and worse features. Such a fee, regularly collected, has, to the merchant, the appearance of a tax for the privilege of using scales. He can not be expected to grasp the conception that the fee is direct compensation for a personal service and protection rendered himself. Regarding it, then, as a tax, he knows that a tax implies freedom of use of the articles during the fiscal period, and misunderstanding or resentment follows a later condemnation if the scale goes wrong.

The service of the sealer in testing scales, weights, and measures is a service rendered to the whole community. No one class of people gets the whole benefit of it; no one class should bear the whole expense of it. If we are to say the merchant should pay all the expense of scale testing, then by strict analogy we should say that only those who send children to school should pay the school tax; those who have fires should pay all the expense of the fire department; only those who travel on foot should be taxed for sidewalks.

Clearly something is wrong with this argument. It is too easily carried to absurdity. Shall only those on the border pay the costs of our Army? Shall only the sick pay for the Public Health Service? General services should be paid for from general funds. Yet over the country at large weights and measures offices freed from the fee system are few. The system has lived because convenient and because it makes easy the path of the superficial worker who seeks only the appearance of results accomplished. The sealer whose heart is in his work and whose ambition is real service to his public will protest the fee system on sight and fight it at every opportunity.

The fourth trouble that the sealer finds in his local administration is the difficulty in getting a proper attitude on the part of the officials of his town, the general public, and his own working force toward the retail dealers. The dealers, as a rule, are square. The average dealer, if treated fairly, is the best friend of the sealer. So long as he is justly treated he recognizes in the sealer his best protection against mistakes, misunderstandings, and trade abuses. As a rule, when merchants learn what proper inspection means they clamor for more.

Yet any merchant who takes up the report of the average sealer finds that what is emphasized therein is the number of crooked dealers who have been caught—no mention of the 95 per cent who are honest and useful. He may subscribe to the Scale Journal and turn to the Sealers' Notes, where the majority of items are statements that "Sealer Blank picked up such and such a man, who was taken to court and fined thus and so many dollars," or "Twenty-five thousand milk bottles confiscated by the —— weights and measures department were destroyed by Sealer John Doe. Mr. John Doe also had 5,000 pieces of weighing equipment in his office which he has seized." No attention is called to the fact that John Doe's city is so large that 25,000 milk bottles is a rather small percentage of the total number in use and 5,000 scales a very small proportion of the total number of scales. No; the bald figures are thrust out upon an unthinking public who read the large numbers, think of the monthly grocery bill, and cuss all dealers in consequence.

Running all through most of the literature now being published by the sealers is an element of persecution of the established trade, the

fundamental assumption that the merchants are crooks whom the sealer is trying to catch. No statements are ever published of the fact that the vast majority of shortages are due to accident or ignorance rather than to dishonesty. Yet what the sealer needs and what the merchants need is cooperation. We are after a constructive service to the public. When you go into a man's place of business and give him credit for trying to do right, and not knowing how to keep his scales properly adjusted, talk to him in his own language (not English, but his own language, that he understands), and teach him what is needed, you will find him anxious to cooperate and to please. In 95 per cent of your cases you will have no further trouble with that man.

The next problem that confronts the sealer as a problem strictly up to him and not affected by anybody else or any other jurisdiction is the harm he finds himself doing to dealers through the institution of court proceedings in cases where there is reasonable doubt of the intentional guilt of the offender. The practice followed in most jurisdictions (which most any lawyer will tell you is the correct one) is to take such a case to court for a decision on its merits. The familiar argument is that the courts exist to try just such cases. If the man be innocent, justice will be done, and he will be acquitted.

But many offenses occur through excusable ignorance of the technicalities of the law or through ignorance of the mechanical properties of scales or through unavoidable accident. If such a case be brought before the court, the business standing of the defendant is hurt, even though he be acquitted. In the vast majority of such cases a quiet word of instruction and warning to the dealer would have permanently corrected the abuse and secured his future cooperation. To try to avoid the responsibility for the hardship done to such a man by saying that justice was served in his acquittal is rank hypocrisy.

The court should never pass on the merits of any doubtful weights and measures case. No sealer should take a case to court until he knows there is absolutely no reasonable doubt as to the moral, as well as legal, guilt of the offender.

Let me illustrate to you from actual records the results of this policy as applied in the District of Columbia. Of approximately 700 cases examined into where the law was technically broken, where the offenders were legally guilty, there were only 30 in which there was no doubt that the man was morally guilty of an intention to cheat. These 30 cases only were sent to court. Because the cases were clear cut and the evidence conclusive, the trials were rapid. Because the court was thankful for the economy of its time, and because the court knows the policy of our office results in bringing only serious cases before it, the fines inflicted were exceedingly heavy.

Let me make one point very clear. Second offenses of doubtful nature do go to court. Out of the 700 mentioned only about 20 were second offenses. Most dealers, if handled properly the first time, do not offend again. Like all the rest of us, they are anxious to do right, but oftentimes they simply don't know how.

The final trouble experienced in the local jurisdiction, which is in no way dependent upon outside conditions, but is strictly up to the sealer himself, arises out of the futile folly of the "test case." Even

the basic theory of the test case is so ridiculous as to be difficult of expression. It appears to be this:

That a good law has been passed, is on the statute books, appears to be good and effective, and is certainly going to do a lot of good; therefore, because there is always a possible chance that somewhere a court might be found foolish enough to knock it out, because there is a bare chance that some sharp lawyer may be able to find some legal twist or technicality to kill it, then let's invite this misfortune early, instead of usefully applying the law and demonstrating its practical advantages.

Could anything me more illogical? It means, shortly, that because, ultimately, some man may go to the court with a case that will nullify a beneficial law, therefore invite the nullification as early as possible. The result is that a great deal of good legislation, which is needed, which is wanted by practically all parties everywhere, and which would stand for long periods under normal conditions, gets thrown out early, leaving the public without proper protection until the legislative bodies can meet again. Such tactics keep the legislative bodies constantly at work trying to patch up legislation to make it accomplish what they are trying to get done, and results finally in legislation by the judiciary, which is a condition opposed to all fundamental principles of American legislation.

The test case also invites another set of abuses. It invites continual criticism and a continual tendency to haggle and harass the sealer from every source within his public. Among scale men, merchants, and even consumers there is a feeling that he is ready, if approached, to deliberately suspend action on a piece of legislation which he knows to be good, during the time decision is pending in a court on a case which he has agreed to help frame up in a way that gives the other fellow more than his usual chance of winning, in which it is usually prearranged that appeal will be made from whatever decision is handed down, so that it will take the longest possible time to reach a final settlement. They know and we know that there are only two possible results of this policy, both of which are bad—either a technically sound law which will stand and should be enforced is unnecessarily suspended in its operation and the public robbed of its protection or else a good and useful law gets permanently thrown out of operation through a technicality which, under normal administrative routine, would probably not have been invoked for years.

The sealer's duty is to seek the complete enforcement of the spirit of the laws, not to hunt for technical faults in them.

So much for the first group of troubles.

The second group are the troubles arising out of faulty conditions in the scale trade. I think most of us will agree that practically everywhere the scale trade shows too much tendency, when a sealer takes action which is adverse to their interests, to first attack his intelligence and then if that fails to attack his motive. How long this attitude shall last is up to the sealer. It is largely our fault that there has not been enough of mutual confidence and thorough cooperation between the scale-distributing agencies and the sealers. I am convinced of this, not only by experience within our own territory but also from a fairly wide observation over the entire eastern section of the United States.

Part of the trouble is due to the fact that sealers have not considered carefully enough the difficulties and handicaps under which the scale companies are operating, and have shown too little consideration of the real needs of the trade. There is too much disposition to think that scale companies can do almost anything—that, being big and apparently rich corporations, they can do practically anything the sealer may demand. But it is equally true that most of the scale companies have thus far shown an absolute unwillingness to play the whole game on the square and go full halfway in the compromises. They are eager and anxious to take full advantage of every favorable decision or action of the sealer, and to praise him to the skies when his action is favorable to their interest, but fight him from the drop of the hat, and by means not always fair and aboveboard, when he decides a question against them.

It seems to me that the solution of this problem is in the hands of us sealers. We can train up in our offices promising young men who will be exceedingly valuable to the scale companies. Of course the point of view of such a man will change somewhat as soon as he leaves the sealer's office and enters the employ of the company, but in spite of that he must carry with him a knowledge of and sympathy for the work and aspirations of the sealer, which, coupled with the sealer's knowledge of and confidence in the man, must tend toward a more thorough and whole-hearted cooperation.

I am so thoroughly convinced of the value of such an arrangement that here in the District of Columbia we are establishing a definite and permanent policy along these lines. Only technically trained men are to be taken on, these men to be young and selected partially with a view to their ultimate value to the scale companies. We will welcome any scale company that will hire one of our men on the level—a bona fide employment, permanent, and responsible—and will be glad to see them hire any man we have, provided only that they put him to work in our territory.

We assume that they can not get him away unless they can pay him more than Congress permits us to pay him. We assume that they will want him because he has been a good sealer, and we know that after he is affiliated with them he will cooperate with us, because he has been a good sealer and knows the value of what we are trying to do. Therefore we believe that there will arise a mutual understanding and cooperation which will be beneficial to both sides. To this end, in the training of our beginners we see to it that they early receive the knowledge that will enhance their value to the trade. Of course we know that we can not hold these men very long. We don't want to. We will be glad to get two or three years of service of such men before they go out into a service in which they can earn more money and be just as valuable to the cause of honest weights and measures as they could be were they still in our department, only in an indirect way.

The third class of troubles includes those arising out of the present poor organization of the weights-and-measures forces and inadequate legislation. These fall into two subdivisions, of which the first is the duplication of work going on everywhere and on every side. I will point out one case that is characteristic. Why should my department, or any other department corresponding to mine, put in a

testing apparatus and run tests to determine tolerances and specifications, or to make tests on occasional pieces of special apparatus that the ordinary sealer can not take care of in the field, when there exists another, larger organization, specially equipped, national in its scope, perpetual in its nature, with trained specialists retained for the performance of this work? Yet that is being done. In State departments which are short of funds and of field men, in cities unable to show one inspector to the hundred thousand inhabitants, we find laboratories set up and men detailed to work in them on experimentation and tests that could far better be done at the national institution.

Speaking now as a local sealer, I would infinitely prefer not to do that work. Before coming here it has been my privilege to serve under some of the best managing engineers and sales managers in the United States, and among them all I have found this rule applied: Take full advantage of every outside facility at your disposal, and put your own force to work on things that nobody else can do for you.

The largest producer and distributor of steam power-plant auxiliaries in America told me once that the secret of all successful management lay in this: "Never do anything for yourself that you can get somebody else to do equally well for you." Yet on every side we find men working in laboratories while field forces are inadequate; money spent on laboratories while field inspectors are underequipped; thousands upon thousands of dollars annually spent in States and cities all over the Nation, in trying to do for themselves work which can be better done in the central bureau which the Congress has established and elaborately equipped for that purpose.

Administrative work must vary in some degree in different jurisdictions, but technical work is the same the world over. Given the skill, and given technical men influenced by nothing but technical observations, the final report will read the same if the men are of first-class caliber, no matter where the work is done. Technical investigations properly conducted can result only in flat, cold statements of truth. That being the case, the whole work of these laboratories being mere matters of physical and mathematical demonstrations of truths, it is high time to concentrate all the time, money, and effort that is being spent into the place where we can get the truth best. Instead of wasting money and effort in a number of small underequipped, scattered laboratories, with underpaid workers continually changing employment, we should send all work that can be sent, surrender all responsibility that can be surrendered, to one great laboratory where, besides securing the economies that come from large-scale operation, we can rely on Congress to get first-class men and to pay them enough to hold them permanently on this important work.

The last trouble—one that is causing great loss and much injustice throughout the country—arises from irregular sectional legislation and irregular enforcement of such legislation as happens to be uniform. Although the need for the Ashbrook bill logically falls under this head, I am not now referring to it because there is a session scheduled for the discussion of that. I refer now to something quite different.

In every large city, New York, Chicago, St. Louis, Philadelphia, Baltimore, and Washington, for instance, there are great wholesale houses selling to retail dealers and also to some extent to the public, who are buying in other jurisdictions—usually in country sections of other States. In the cities they are held to very close tolerances—here in Washington, for instance, we require their scales to be within an error of one-eighth of 1 per cent—and they learn to make it. There scale men are educated to that degree, and are therefore able to put in a scale anywhere and adjust it to within one-eighth of 1 per cent of any point desired. Now, these people are buying in other States, usually at receiving stations in country districts where much larger tolerances are allowed, where in most cases a scale will pass easily if it is within 3 per cent of accuracy, and where scales frequently are tested once when new and going into service, and are not tested again for years. So what they do is to carefully test and adjust these country scales to within one-eighth of 1 per cent of the limit of tolerance that will be allowed them there, and thus pocket the difference in their favor. I use the example of a 3 per cent difference advisedly, for the very first case of this sort that came under my observation was that of a company buying literally millions of dollars worth of goods every year in sections where their scales were 3 per cent off from absolute accuracy, and selling over scales that were within an eighth of a per cent of absolute accuracy—entirely within the law in each jurisdiction, and making 3 per cent on the material before beginning to count visible profits at all. Of course when this concern could also sell in a section which allowed a 3 per cent tolerance, it could make 6 per cent profit on the material handled. Of course such a case would be extreme, but rake-offs of 1½ or 2 per cent in this way are common.

That is a tremendous loss to the community at large, most of which is thrown back upon the producer. The agricultural sections, which have the poorest legislation and also lax enforcement of law (or none at all) are, as a rule, the ones that are suffering the most. I know this because of my connection in the marketing world. Here in the District of Columbia the same department has charge of the marketing work and also of the weights and measures, and I came here primarily as a market man. Some of the problems that arise in the marketing work would be quick eye openers for those who conceive weights and measures work to be local and imagine State legislation to be sufficient. Wherever legislation varies, wherever there is a difference in the tolerances allowed, or whenever too much tolerance is allowed, scales can be set within the range of the variations allowed and made to yield the operator an unfair profit, which the producer loses. The whole steal is pulled off strictly within the law. So long as the Federal Government fails to accept its responsibility in the matter and leaves it up to the varying whims of State legislatures, such steals will continue to be within the law. You and I know that in the business world what is legal becomes the business ethics. This evil will not disappear until stamped out by Federal legislation.

Do not think for a moment that if your jurisdiction is at one end of such a deal you can reach it by cooperation with the local sealer at the other end. In rare cases that may be possible, but usually you will find that he, like yourself, is limited in his activities by the laws

of his State, and that the matter can not be reached by discretionary regulation. Even in those cases where it could be so reached you can not count on getting the cooperation of the fellow at the other end. In these States where sealers change an average of every two years, a cooperating sealer is usually followed by an unfriendly one. Undertake then to force a correction and you find yourself prohibited by an unwritten law of professional ethics. It is odd, but the only professional ethics that appear to have grown up in the weights and measures business is that branch which prevents you from criticizing your neighbor; and you can not take up a negligence or an error of judgment in another jurisdiction lest you appear to criticize—lest you get the other fellow in bad, or get in bad with him.

This fault occurs in other forms. A scale is condemned close to the line of your jurisdiction and a short time later you will find that same scale, with the remains of your condemnation tag still hanging to it, in service not one-quarter of a mile from where you condemned it. The stuff weighed on that scale is sent into your territory and you can not touch it. A case in point occurred in the District of Columbia. A coal dealer who sells nine-tenths of his tonnage within the District of Columbia has his receiving yards close to the District line. We condemned his scale, which was an old one and beyond repair. He moved it less than 200 yards across the District line into an adjoining State. Over there his scale passed, and we can not touch it. His coal comes into the District, and the only way we can get him is to catch and checkweigh his wagons, but it is exceedingly difficult to do that with a small force. That sort of thing can not be reached under any existing legislation. We need something in the way of Federal legislation to meet such conditions.

Such conditions in a field of work which is of the greatest importance to all people in every community suggest the need for a constructive organization of the work where chaos now exists, to the end that in the future the work may be so organized, the various tasks and functions so assigned, that no local official, no matter where located, shall ever be hampered or prevented by forces beyond his control from attainment of the highest standard of usefulness; that uniformity of legislation and continuity of administrative methods may exist throughout the States for the benefit and proper protection of the general public; and that the manufacturers of weighing and measuring apparatus may have but one uniform set of requirements to meet. I am one of those who believe that those men need a great deal of consideration.

Finally, the organization should be such that there may be a minimum of duplication of work, and the greatest possible result obtained with the least possible cost to the public. I am not going to try to describe in detail how this shall be done, although I have clear ideas on the subject. But as a rough sketch—

We need the local sealer; we need the State department supervising him to help him—not to restrict him in any way, but to help him and to give him aid when he needs it; and instruction or assistance when he calls for it. We need a central helping and educational body of a national character for the assistance of State departments. Such a body should have men constantly employed in the field, going from State to State, to assist, to counsel, and to advise State departmental heads in the securing of uniform administration of laws in order to

smooth out the troubles that now exist through difference in administration of practically the same laws in the various States. We need, finally, a greater uniformity of local State laws; and, without meaning in any wise to appear to be shoving any particular measure, I want to say that here in the District of Columbia, after trying for two years to draft a first-class piece of legislation for ourselves, we found that we had arrived so nearly exactly on the model law in its second form that we have decided to put that up instead, because we know it has stood the test.

We need uniform legislation, and we need some central body, national in its character, to serve the entire Nation through the absolute determination of what types of weighing apparatus shall be allowed to be put upon the market, in order that the local sealer may never have to contend with those difficulties, and to determine absolutely what tolerances shall be allowed on the various types of apparatus. This involves no restriction of the local duties or privileges of any State official or any local sealer, except that it marks the lower limit of what he may do in this line. Any State should be permitted to go further than such a national organization would go. Any State should be permitted to require closer tolerances, if it can get them applied in practice, but no State should be permitted to fall outside of a minimum that should be set by national authority.

I thank you.

RESOLUTION FOR APPOINTMENT OF COMMITTEE TO INVESTIGATE ELEVATOR HOPPER AND GRAIN SCALES.

Mr. QUINN. Mr. Chairman, I have here a resolution.

The ACTING CHAIRMAN. The secretary will please read the resolution.

The SECRETARY (reading):

Resolved, That a committee consisting of the State weights and measures officials whose territory includes a grain port, together with the local weights and measures officials of those ports, be appointed to draft rules and regulations and methods of tests for elevator hopper and grain scales used in connection with grain elevators in the United States for the production of uniformity of such tests, rules, and regulations, such committee to consult with and seek the cooperation of the various grain associations of such ports.

DISCUSSION.

Mr. QUINN. I move the adoption of that resolution, Mr. Chairman.

The ACTING CHAIRMAN. Shall we pass upon this now or refer it to the committee on resolutions?

Mr. QUINN. Mr. Chairman, in offering this resolution I had in mind a condition that applies to almost every section where grain is handled. In the city of Buffalo we have a system of testing scales that we think is correct. In testing a scale there we test to the full capacity. We have about 100 such scales with a capacity of 12,000 pounds. In making that test we test the scales with 6 tons of weights. At all those tests we have scale men and the superintendent of the elevator present. The last elevator I visited had 400,000 bushels taken out, and they were 7,500 bushels short. There is an agreement among the lake carriers, the vessel owners, and the different associations on the Lakes to allow 15 pounds to a thousand bushels,

and if they get anywhere near that they are satisfied. There is no good reason why there should be any difference in a cargo coming down the lakes. If all the scales are tested in the same way there is no chance for any leakage. All we know in Buffalo is the method we follow. By the adoption of this resolution we could find out methods used at other ports making the tests, and we will be glad to learn anything they can show us. We are willing to learn, so I hope this resolution will be adopted.

The ACTING CHAIRMAN. Unless there is objection, the motion will be put. Those in favor say "aye," opposed "no."

(The motion was agreed to.)

The ACTING CHAIRMAN. The Chair will entertain a motion to appoint a nominating committee.

Mr. SWEENEY. I move you, sir, that the Chair appoint a nominating committee.

(The motion was seconded.)

The ACTING CHAIRMAN. Those in favor will say "aye," opposed "no."

(The motion was agreed to.)

RESOLUTION IN OPPOSITION TO FEE SYSTEM OF INSPECTION.

Mr. REICHMANN. May I introduce a resolution?

The ACTING CHAIRMAN. Yes.

Mr. REICHMANN. My reason for asking that it be received at this time—perhaps not the right time—is that the gentleman who handed me this resolution wants it in connection with some work in his State, and wants to use it to-day. The resolution reads as follows:

Resolved, That the National Conference on Weights and Measures in convention assembled is unalterably opposed to any fee system for weights and measures inspection or sealing, because it is against the interest of the consumer, is conducive to inefficient work, and amounts to a double taxation of honest merchants.

I move the adoption of the resolution.

(The motion was seconded.)

The ACTING CHAIRMAN. I think perhaps there is a reason for acting upon this now. If there is no objection, we will act upon the motion directly, without referring it to the committee. Are there any remarks? All those in favor say "aye," opposed "no."

(The motion was agreed to.)

Mr. BARNARD. Mr. Chairman, I move you that we adjourn for luncheon.

(The motion was seconded and agreed to.)

(Thereupon, at 12.20 o'clock p. m., a recess was taken for luncheon.)

FIFTH SESSION (AFTERNOON OF THURSDAY, MAY 27, 1915).

The conference reassembled at 2.30 o'clock p. m.

APPOINTMENT OF COMMITTEES.

The CHAIRMAN. The Chair has been instructed to appoint two committees—a nominating committee and a committee on resolutions, On the nominating committee I appoint Mr. Downing, of Wisconsin; Mr. Farrell, of New York; Mr. Hanson, of Massachusetts; Mr. Hand, of Mississippi; and Mr. Cluett, of Chicago.

On the resolutions committee I will appoint Mr. Willett, of Indiana; Mr. Waldron, of New Jersey; and Mr. Johnson, of California.

Mr. RIORDAN. Mr. Chairman and fellow delegates, this is the first convention I have attended here. I have been a sealer of weights and measures for about 13 months, and I believe that it would be of some interest to this convention to know how it strikes me as a beginner, and I want to say right here and now that to my mind the most practical paper read at this convention was the one read this morning by Mr. Sherman, and I say that with all due respect to the other papers which were read, and I gave them all my closest attention. However, I feel that I came here to get information that would be of some practical use to those people of Lowell who are responsible for my being here, and I feel that I got more practical information from that paper of Mr. Sherman's than any other, and I want to thank Mr. Sherman and tell him I appreciate his paper very much. I feel if I heard nothing more than that paper that I myself and the people of Lowell are amply repaid for sending me here.

The CHAIRMAN. I feel a good deal as the last gentleman, that some of the technical papers will be of a good deal of use, and I am glad to know that they are appreciated. I myself was also greatly impressed with Mr. Schlink's paper and with that of Mr. Brooks's, and I do hope that in another year we will have more articles along those lines. I was glad to see you all circulating among the laboratories.

I am reminded of a promise made to hear the city sealers. In circulating among them I find there are a few who have come across novel experiences and brought up new questions, and I sincerely hope before we get away from here that we can hear from some of them. I do not want to interject that matter now, because we have laid out a program which we will have to proceed with. I understand we have a lady delegate here—Mrs. Haenlein, from New York City.

We will be very glad to hear from Mrs. Haenlein. Mrs. Haenlein is almost the first lady delegate we have ever had in the convention and a number have asked that she be heard, and we are glad to grant her the privilege of the floor if she desires.

REMARKS BY MRS. KATHERINE HAENLEIN, CONFIDENTIAL REPRESENTATIVE, MAYOR'S BUREAU OF WEIGHTS AND MEASURES, NEW YORK, N. Y.

Mr. Chairman and delegates, I would like to tell you a few things in regard to the work of the women. I believe the city of New York has the distinction of having the only women inspectors of weights and measures. I believe other departments have inspectors that they have kindly loaned to the bureaus of weights and measures of the different States occasionally, but our city has three women inspectors. The work of these women consists principally in correcting the thing that Mr. Sherman says is an abuse. I agree with Mr. Sherman in that. These women go into stores and ask for sugar, tea, coffee, or any other commodity such as the women in the household use and also ask the price. After they have their aggregation of commodities together the man states the price of the entire number of articles, and the woman politely tells him she is an inspector of weights and measures and would like to reweigh these articles. They then reweigh those, and if they find that the man is a violator of the law in any particular—of course they use their judgment and tact as to how much of a violator he is—they try to correct the condition. They state to the man that they know he is doing the wrong thing, but as he has not been a violator previously, and as they are not sure but what it is carelessness they will give him another chance. Incidentally, within a very short time, another woman inspector makes a visit to this man to see if he is doing the same thing, and if he is, they want to know why.

That is the method I believe Mr. Sherman suggested. Instead of having these people brought into court, they are brought up with a sharp turn to explain to our commissioner, who prosecutes them if it is a real violation.

I did not intend to have anything to say during the convention, and I am a trifle embarrassed. My particular work is not that which I have outlined. My work as confidential representative is the acquiring for the commissioner of data on the work that he is engaged in, and rounding it up and getting to the point where he finds out things as they are, without inspection. I go in as an individual, not as an official at all, and that gives the commissioner a good working idea of how things are running. Then, if it is necessary to have any prosecution, I push the thing up to where we bring in the inspector, and the inspector completes the work of bringing him into court. That absolves me from going into court and becoming identified among the dealers of New York. I wish you all success in your meetings.

RESOLUTION EXTENDING VOTE OF THANKS TO MR. SHERMAN.

Mr. Waldron. Mr. Chairman, I feel there should be some recognition shown by us for the very pleasant time we had on yesterday. One of our members, through his efforts, time, and trouble, went into the matter and provided a very pleasant time for us, and, therefore, I move that a vote of thanks be extended to Mr. Sherman for the very good time he has shown us.

(The motion was seconded.)

The Chairman. I am free to confess that it was Mr. Sherman who suggested that sort of an entertainment, and we carried it out,

although we were at considerable loss to know just what to do, from the beginning. Those matters do not go well unless we have someone to put energy into them, and I want to heartily indorse the second.

(The motion was unanimously agreed to.)

The CHAIRMAN. We will now proceed with the next item on the program, the discussion of tolerances and specifications, and, in Mr. Fischer's absence, I will ask Mr. Holbrook to read the report.

Mr. REICHMANN. Is this the report of the committee on tolerances, a preliminary copy of which, with amendments, was sent out to all delegates, which you are calling for now?

The CHAIRMAN. Yes.

Mr. REICHMANN. I think all the gentlemen here have read that report and have gone over it carefully.

Mr. HOLBROOK. This is the formal report preliminary to that matter which is in your hands.

REPORT OF COMMITTEE ON TOLERANCES AND SPECIFICATIONS.[1]

Your committee on tolerances and specifications respectfully submits the following report:

In accordance with the motion adopted by the conference of 1914, the committee have revised the wording of the tolerances and specifications in order to clarify them. In the course of this work various discrepancies and omissions were found and it was deemed necessary to incorporate these changes in the advance copy of the report. The final report, which was distributed yesterday, contains further revision, which, through lack of time, we were not able to include in the tentative report.

The following letter of transmittal accompanied the report sent to each delegate:

To the delegates to the Tenth Annual Conference on the Weights and Measures of the United States:

DEAR SIR: There is inclosed herewith an advance copy of the report of the committee on tolerances and specifications, which will be presented to the tenth annual conference to be held at the Bureau of Standards in Washington, D. C., May 25–28, inclusive.

This report has been prepared pursuant to the instructions of the ninth annual conference to revise the wording of the tolerances and specifications, without changing their meaning and effect, in order to clarify them. When the committee undertook this work certain discrepancies and omissions in the tolerances and specifications as at present adopted became apparent, and after consideration it was decided to make such additional changes as were deemed necessary and to present the complete report for the action of the coming conference. This report is a tentative one, but it contains most of the changes of importance. The committee will continue its work and a few committee additions and amendments will be offered at the conference, which will finally complete the report.

Delegates are requested to read this advance copy in connection with the original report and the amendments thereto, as published in the eighth and ninth annual conference reports, respectively, in order to inform themselves as to the changes proposed and to give due consideration to these changes. They will then be ready to take such action as they deem proper when the final report is presented. Please bring the inclosure with you.

Respectfully,

(Signed) L. A. FISCHER,
J. C. CONNORS,
Committee.

[1] The tolerances and specifications, as adopted, will be found in Appendix 1, p. 193

A copy of the tentative report was also sent to each manufacturer with the following letter of transmittal:

To manufacturers of weights and measures and weighing and measuring devices:

DEAR SIR: We are inclosing herewith an advance copy of the report of the committee on tolerances and specifications, which will be presented at the Tenth Annual Conference on the Weights and Measures of the United States, to be held at the Bureau of Standards in Washington, D. C., May 25–28, inclusive.

This report has been prepared pursuant to the instructions of the Ninth Annual Conference to revise the wording of the tolerances and specifications, and there have also been included several changes in meaning and certain additions where discrepancies and omissions had become apparent. This report is a tentative one, but it contains most of the changes of importance. The committee will continue its work, and a few committee additions and amendments will be offered at the conference, which will finally complete the report.

The committee believes that the changes as a whole are not such as to greatly affect the manufacturers. However, you are requested to read this advance copy in connection with the original report and the amendments thereto as published in the Eighth and Ninth Annual Conference Reports, respectively, and if any criticisms appear necessary you are requested to submit them in writing to Mr. L. A. Fischer, Bureau of Standards, Washington, D. C., the chairman of the committee, not later than Tuesday, May 25. They will then receive the attention of the committee and of the conference.

Respectfully,

(Signed) L. A. FISCHER,
J. C. CONNORS,
Committee.

In accordance with the invitation contained in this letter to the manufacturers various communications containing suggestions and objections were received, and these suggestions and objections, in so far as they refer to specific tolerances and specifications contained in the report, will be read by your committee. These are being read in order that the conference may be informed as to the nature of the objections made.

The committee extends its thanks to the Bureau of Standards for the valuable advice and assistance they have readily given. The committee also extends its thanks to the weights and measures officials and to the manufacturers of weighing and measuring devices for the valuable suggestions and criticisms offered.

Respectfully submitted.

(Signed) L. A. FISCHER,
J. C. CONNORS,
F. P. DOWNING,
Committee.

DISCUSSION.

Mr. REICHMANN. Mr. Chairman, inasmuch as this committee has sent out advance copies of this report, which were received a week or two ago, which no doubt the delegates read over with more or less care, the main body of the report being simply small changes in language of those parts of previous reports which have already been adopted by this conference, I move you, sir, that the committee's report be adopted as a whole instead of section by section.

(The motion was seconded.)

The CHAIRMAN. Are there any remarks? I would like to ask whether this will not preclude the bringing up of any special points?

Mr. REICHMANN. It will not preclude the bringing up of any special points, but it is merely to expedite the matter. I do not agree with some of the English that the committee uses, and they would

not agree with some of the English I use, but we would not be getting anywhere to take this up section by section.

The CHAIRMAN. While it may not be relevant at this time, I have often thought that the time has come for enlarging the committee on tolerances in order to make it a little broader in scope. You have heard the motion and second. All in favor say aye, contrary no.

(The motion was agreed to.)[1]

The CHAIRMAN. Are there any special points to be discussed in connection with this subject? It would be a very good thing to call the attention of the committee to those matters which you think ought to receive more careful consideration, or any matter that will be of help to the committee.

Mr. Reichmann has suggested that when you go home, as you think of these matters, if you would communicate with the committee it would be a good idea. We have to depend more or less on committees, and it would be an excellent thing for the various delegates to correspond with these committees during the year.

Mr. AUSTIN. Mr. Chairman, is it in order to take up the question of special points at this time, in connection with these specifications?

The CHAIRMAN. Yes. The committee would be glad to receive suggestions.

Mr. AUSTIN. Under the heading "Scales—General specifications," I read section 10, as follows:

> No scale shall be equipped with a scoop counterbalanced by a removable poise or weight.

I know in my experience we have a great many scales of that pattern that are in use, especially in hardware stores, and it seems to me it is rather an unnecessary provision. I can not see where a scoop weight to counterbalance the scoop is anything that needs to interfere with the honest working of the scale. I do not care to make a motion to strike out, but I would like to hear an expression on that subject.

Mr. CONNORS. What the committee had in mind was what is commonly known as a "scoop-on and scoop-off" scale; also a counter platform scale with a removable weight to counterbalance the scoop. The committee has found that there is a great deal of fraud caused by such a removable weight, inasmuch as the dealer who is inclined to short-weight simply throws the weight away or hides it in some way and takes it out only when the inspector comes in. When selling he simply fills the scoop and puts it on the scale without counterbalancing, thereby short-weighting the customer the weight of the scoop. Some scales are counterbalanced with a ring on one side and the scoop on the other. We found a number of cases where the dealer removed the ring and placed the commodity on the scale. The same thing happened on counter platform scales when the removable weight was not used. We tried to correct that condition by providing that the weight be attached to the beam in some manner and that the device indicate on the customer's side whether the scoop was on or off the scale. Have I explained myself clearly?

Mr. AUSTIN. Yes, sir. I understand the reason for that provision; but it seems to me, personally, that it was an unnecessary precaution.

[1] The tolerances and specifications as adopted will be found in Appendix I, p. 193.

Many scales equipped with a scoop are also used for the purpose of weighing flat materials in hardware stores where they can not use a scoop, and if they have the scale equipped with a scoop alone they could not use it for the weighing of these heavier materials. For instance, if they wanted to weigh iron upon a platform scale they could not well use the scoop, and if they have occasion to weigh nails over the same scale they would either have to have two scales for it or counterbalance the weight of the scoop.

Mr. REICHMANN. This only applies to perfectly obsolete types of scales which no scale manufacturer makes in that way any more. This does not rule those scales out which Mr. Austin refers to.

Mr. CONNORS. No. They represent on the customer's side whether the scoop is on or off.

Mr. AUSTIN. One more question. Last year there was a clause stricken out of the specifications relative to the mechanism used to compensate for temperature effect upon springs. I find here, section 11, under the heading "Spring scales":

> No device to alter the working or effective length of the spring shall be placed on the outside of the scale.

I would like to ask the committee for an interpretation of that clause and whether it applies to the scale referred to in last year's specifications, where this instrument is placed underneath the platform of a scale.

Mr. CONNORS. In my mind, and in the mind of the committee, I know there was nothing in the specifications prohibiting the use of that scale. What we had in mind was to prevent the placing of a shortening or lengthening device where it could be easily gotten at.

Mr. AUSTIN. Then in this particular scale—I presume the committee knows the one to which I refer—this device which is placed underneath the platform, which requires a screw driver to manipulate it, would not be considered such a device.

Mr. CONNORS. No, sir; that would not shorten or lengthen the spring.

Mr. JOHNSON. I would like to bring up a question with regard to section 3 of the specifications, under the heading "Milk bottles," reading as follows:

> 3. Glass bottles with an inside diameter of not over 2 inches immediately below the cap seat or stopple shall hold the correct capacity when filled within one-quarter inch of this cap seat or stopple; bottles with an inside diameter of over this amount immediately below the cap seat or stopple shall hold the correct capacity when filled to within one-eighth inch of this cap seat or stopple.

I made a thorough investigation of these conditions in California a short time ago, and in conference with the manufacturers of filling machines, and they contended that the machines were built so as to fill their containers up to the cap-seat. They further contended that if we were to require a filling to a point a quarter of an inch below the cap-seat that it would eliminate the practical use of all these machines so constructed. I further made a careful investigation as to the manner of filling bottles with these machines and found that in all of the bottles there was a certain amount of air space which, on investigation, proved to be little less than one-eighth of an inch, although they endeavored to make the capacity up to the cap-seat. It

therefore prevented the adoption of a specification establishing a capacity up to within one-quarter of an inch of the stopple or cap-seat. The milk men contended that if there was a larger space permitted, that in the delivery of these containers the milk would churn and be in an unsavory condition. I have, therefore, adopted in the State of California specifications to the effect that the capacity shall be within one-eighth of an inch of the cap-seat, which provides for the use of these various characters of machines, and it appears to be perfectly satisfactory to the milk men and to the manufacturer as well. I believe if you will kindly view this matter from my point of view that one-eighth of an inch would be more practical under present conditions than a large space of one-quarter of an inch.

The CHAIRMAN. If the machine can fill it to within one-eighth, why can not it fill it within one-quarter?

Mr. JOHNSON. They contend their machines fill it up to the cap-seat without any air space, but on investigation I find that there is an air space of a little less than one-eighth of an inch, and to compensate for that condition, on the recommendation of the milk men and manufacturers, I adopted one-eighth inch.

The CHAIRMAN. There has been a great deal of discussion about this matter and there are a number of people here who have given it careful attention.

Mr. SHARP. We were here last year and raised a rumpus, I might say, on the milk bottle situation. As we have read these advance copies of the specifications and tolerances we heartily agree in every respect with every word of them because we believe every word in there is the best thought that can be put in there, and especially the tolerances on the average test as they come into our city. We have more than 3,000,000 bottles used in our city, and I believe the tolerances which we hope to adopt when we get back will solve the problems we have to deal with.

Mr. SHERMAN. I want to speak in favor of standing absolutely pat on this section of the specifications, for the reason that this space is necessary in order to prevent spraying the customer with milk when he attempts to open the bottle. Most bottles have tags to pull the stopper out, but as a matter of fact, the common way to open the bottle is to jab something into the top, and the milk generally flies out over your face.

Going further, you will find a greater air space allowed in the case of milk pasteurized in a bottle, which is absolutely necessary. We have that up in the District this year very acutely. In the case of milk pasteurized in the bottles, the bottles made under the old specification which contain the full quart or pint, were filled up to the cap seat. The bottles were filled with the correct amount of milk, they would go into the pasteurizer, and the milk would expand more than the glass and would bubble around the top; it would then come out hot and the bottle could not be reopened without spilling the milk, and the milk would sink to a space of one-quarter of an inch below the cap seat right along—it averaged that constantly. I have followed the operation all the way through. The milk is put in the bottle and covered with a fiber stopper, which is impregnated with paraffin. The loss is due to a natural bubbling out of milk at the top, since the milk expands more than the glass.

We have also found that machines operated in the District of Columbia can be so adjusted as to put in the amount of milk wanted; we can fill a bottle half full, three-quarters full, or to within a quarter or an eighth of an inch.

The CHAIRMAN. That is a real physical reason and I doubt if you can get around that.

Mr. GOODWIN. Mr. Chairman, in my State we have a very peculiar law. Practically speaking, it is an act allowing tolerances, pure and simple, and that is practically the whole bill. At the close of the act it says:

> This act shall privilege in all measures, or vessels, or jars, or cans, or receptacles used for the sale of milk, a tolerance of 4 drams.

I want you gentlemen to understand what that means. That means 4 drams on a quart, 4 drams on a pint or half pint, or 4 drams on a quarter of a pint. Can you conceive of any legislature passing such a bill as that?

After that is all set out they turn around and say that the whole subject shall be left in the discretion of the State sealer, so that I can do practically as I please. I have to use some judgment, and I was going to ask Dr. Stratton's opinion as to how I should act in the matter.

Mr. MARONEY. Perhaps some of the gentlemen of the conference do not know that there is a machine built which will eventually take care of the sterilization of milk in a much better way than it is done at the present time. I have in mind a machine that sterilizes milk in bulk and agitates it at the same time so as to make the milk uniform—the agitators are hooked up with an electric machine to kill the germs. In view of that fact you do not need a one-eighth inch tolerance but you could even cut that in two.

Mr. JOHNSON. Mr. President, if you were to insist on adopting a quarter of an inch below the cap seat, I am sure it would eliminate the use of every milk bottle in the State of California. Under the change in the specifications, as adopted by the State department reducing the figure to one-eighth of an inch, we have confiscated and destroyed close on to 200,000 bottles, and if I had not changed the specifications to one-eighth inch, we would have had to confiscate all the bottles in the State to make them comply with the requirement we have adopted here.

If you will view this from a practical point of view, and I want to assure you I have gone into the matter very thoroughly, you will think that $\frac{1}{8}$ inch is sufficient. The milk dealers of the State, together with the agents of milk bottles and the manufacturers of these machines, have demonstrated to my satisfaction that the section is illogical.

Mr. SHERMAN. May I call attention to the fact that the third specification is not a matter of tolerance at all, but is a mere matter of where in the bottle the point or quart mark shall be set? The question that seems to be causing the trouble is the question of filling the bottle. I can only say that, although the manufacturers may make these reports, the men who use the machines find they can regulate them very satisfactorily. The milk dealers of the District of Columbia, for instance, fight any change suggested, and it is often afterwards found they can get along very nicely, and they so report.

Mr. CONNORS. Let me say that the committee has made an exhaustive investigation on the subject of milk bottles and found that the practice before the conference of last year was to measure the bottle up to the cap seat. In most places there was a 4-dram tolerance allowed on each bottle. We also found that the filling was done within one-quarter of an inch from the cap seat. That gave the dealer an advantage all the time; a quart bottle would not deliver a quart. In the first place, it might be 4 drams short to the cap seat; in the second place it was only filled to within ¼ inch of cap seat. We inquired the reason for that, and they said: "We would not put through a bottle that was filled away up, because when we do the milk flies all over the customer, and therefore we lost trade; we generally aim to fill it to a quarter of an inch below."

It was therefore the idea of your committee to make the quart bottles deliver a quart, and we recommended to the conference, and they adopted, a change in the filling point which is satisfactory to the manufacturers, and they are all making bottles of that kind. I rather think the bottles Mr. Johnson speaks of in use in California are the old bottles shipped out there, and I think the sooner they get rid of them the better.

Mr. SHERMAN. A short time ago we condemned an odd lot of 6,000 bottles that were short, and a very vicious fight was made to prevent our destroying these bottles because, with the varying legislation existing from State to State, they said they could dispose of the bottles elsewhere to good advantage. Probably that is what has happened in the case of California. I move that this specification, No. 3, be adopted as it now stands.

(The motion was seconded.)

Mr. JOHNSON. Mr. President, it may be that pasteurized milk is a standard condition here, but in California there is very little of it sold. It is usually the delivery under regular conditions of milk as it is, and if this specification is adopted, as I say, it is going to work a very severe condition on the milkmen and on the milk industry there, and I would like to submit, if I would be permitted, an amendment to that specification to make it read one-eighth of an inch below the cap seat.

(The amendment was seconded.)

Mr. WILLETT. I understand the specifications have been adopted as a whole.

The CHAIRMAN. They were, but we called for suggestions.

Mr. REICHMANN. Is there any motion before the conference?

The CHAIRMAN. There is a motion, but I am of the opinion that it is out of order.

Mr. REICHMANN. I make a point of order that the motion is out of order.

The CHAIRMAN. The Chair sustains the point of order.

RESOLUTION TO ENLARGE AND INCREASE POWER OF TOLERANCE COMMITTEE.

Mr. REICHMANN. I would like to make a motion that the committee on tolerances be increased to five, the two additional members of that committee to be elected by the conference, and that the name of the committee on tolerances be changed to board of control. Then

all these matters can be submitted to them and they can take the matters up with the larger committee. In that way you will have more varied ideas and varied opinions. This committee on tolerances has done effective work and has prepared a report in their best judgment. If that same committee be increased to five and the name be changed to board of control, all these matters can be submitted to them, and I suggest they can have a brief written by Mr. Johnson or Mr. Sherman on this particular point, and they can make an investigation or assign certain members to do that.

The CHAIRMAN. Your idea is practically an enlargement of the committee?

Mr. REICHMANN. Yes; and giving them more power.

The CHAIRMAN. Would it give them power over the convention? Of course, their action has to be indorsed by the convention.

Mr. REICHMANN. Their final action would have to be indorsed by the convention, but their action would be final until the convention met again, whereas now the committee on tolerances simply makes recommendations and any recommendation they may make in the meantime does not have any force.

Mr. FARRELL. I second Dr. Reichmann's motion.

The CHAIRMAN. The motion provides for a liberal treatment of the matter in the future. There are a number of interests to be considered, but on the whole I think the suggestion is a very good one. If this is put in the hands of a committee, it ought to be an enlarged committee.

Mr. SHERMAN. Is it intended that that committee, now to be called the board of control, can be reversed in the conference just as the present committee can be?

Mr. REICHMANN. Yes.

Mr. SHERMAN. Then, Mr. Chairman, it seems to me if the committee's powers are not to be enlarged there can be little or no object in enlarging the committee, and that probably it would be harmful. As we all know, the committee that is accomplishing the work is the small committee, and as you enlarge it, it lessens that opportunity to get together a majority of the committee and there is less opportunity to get real consideration. The smaller the committee the more chance you have to get actual results, and if the committee's powers are not to be extended, and if they can be reversed just as easily as they can now, it seems to me there would be no possible gain by enlarging the committee. There can be no objection to the size of the committee as long as reports are not mandatory on the conference.

Mr. REICHMANN. The powers are materially increased, because, under the present arrangement, the committee meets and decides on certain tolerances and then they report to the conference. They have absolutely no power to send out any tolerances until after the conference meets. The board of control would take these and have subcommittees, each member taking up certain subjects, and then they could get together and formulate a rule which would have force and effect as though it had been adopted by the conference when it meets afterwards. It is a perfectly evident and patent fact that a committee appointed by a body of this kind, in an American form of government, could be reversed by the conference, just as Congress can reverse any act of any previous session or the act of any committee. However, it would give them an extended power, and with

the larger committee they could subdivide. I can think of no two better members on that committee than Mr. Neale and Mr. Tighe, on account of their experience. Mr. Downing and Mr. Neale could get together on certain matters, and they could be brought back to the committee and have all their data in substantiating their claims. Others could get together in another place. A small committee, taking up one subject, could work more effectively, but a large committee, divided into subcommittees, could handle larger propositions better.

Mr. SHERMAN. That is what I wanted to find out in asking the question I did. Now, I want to suggest that we all place ourselves for a moment in the place of the manufacturers of weighing or measuring devices, who, at the present time, have to watch once per year and conform once per year to any changes in the tolerances and specifications adopted here. It is now proposed that in the future a committee shall exist, which decides in November on a new tolerance or specification which becomes effective at once, and then, after it has been adjusted by the practical men in the field, the conference may meet here and smash that tolerance or that specification, and it has to be adjusted again. That may happen at six months' intervals; it may happen three months before the conference or a month after the conference. It seems to me it would create a situation of chaos.

If I were a manufacturer, I think I would be much concerned, not because I wanted to object, but because I would never know, after the conference had acted, but what the committee with this power would put its opinions into force and act within the next month, and put something entirely different in force, and I would have to conform to that 11 months, only to have it thrown out again when the conference meets.

Mr. REICHMANN. In the first place, any tolerances or specifications the conference adopts have not the force and effect of law, and are not feared nearly to the extent that Mr. Sherman supposes by the manufacturer. In the second place, we do not believe the present committee on tolerances nor the enlarged committee would be a committee of backsliders, who, in a month or more, would reverse what in their judgment is to the best interest of the people and to the manufacturers and those interested in correct weighing and measuring devices. A specific instance came up shortly after the last conference, where some manufacturer said, "We ought to have the capacity of the weighing devices defined, and clearly defined," which probably was omitted by oversight. In that event the committee could get together and adjust a self-evident case of that kind, whereas now they have the very bother you speak of, of having to wait if they pay any attention to them.

Mr. SHERMAN. Last year at the close of the discussion on tolerances and specifications, the committee as it then stood was given authority by the conference to rewrite the tolerances and specifications providing for just such little discrepancies, their instructions being that they could not change the intention of the conference. In other words, the new committee, with broader control, will have no authority beyond what the present committee has had during the past year. The only change, then, that is really suggested by Mr. Reichmann is to enlarge the committee to five instead of three. I

object. I know from sad experience that five do less work than three and three do less than one.

Mr. LINCOLN. I am with Mr. Sherman for once. It may be a good thing to enlarge that committee to five, but a committee that has the power to put out specifications all the time, without reference to this conference, seems to me is given a good deal of power and control over matters. Another thing, it is a bad proposition, as Mr. Sherman says, for the manufacturers. They would not know at any time when the specifications were going to change and therefore they would be up in the air all the time. I believe it is a good thing to have these specifications brought to this conference and thoroughly discussed. There may be men here who have had experience who can give the results of their experience and their ideas, and then we can amend these specifications, if necessary. Besides, it gives the manufacturers a chance to see them and voice their objections. So I hope you will not adopt the resolution making the committee a board of control.

The CHAIRMAN. The motion is before you. All those in favor please say aye, contrary no.

(The motion was defeated.)

The CHAIRMAN. Are there any further points to be brought out? I think discussion of this kind is very beneficial. We have all reached the point where experience begins to count.

Mr. AUSTIN. I desire to call attention to article 7, under the heading "Computing scales." It always appeared to me that that was a typographical error. The section reads:

> The weight graduation and the value graduation shall be clear and distinct, but in no case shall their width be less than 0.008 inch.

It does not say they can have more than that and they can extend over a space representing one, two, or three ounces of weight. It always appeared to me that it was intended by the committee that they should not exceed that space in width.

The CHAIRMAN. There are two ways of looking at that. You want them to be clear.

Mr. AUSTIN. I am informed, Mr. Chairman, by some of the scale manufacturers that from three one-thousandths to five one-thousandths is ample.

The CHAIRMAN. Was this intetnded as a minimum or maximum limit?

Mr. CONNORS. It was intended as a minimum limit. The committee examined lines of various widths and decided that a line that was less in width than eight one-thousandths of an inch was not clearly readable. The width is clearly checked by the width of the indicator, which may not be greater than fifteen one-thousandths of an inch.

The CHAIRMAN. The width mentioned is nearly one one-hundredth of an inch, and that is perfectly visible. You brought up another question—as to the maximum limit. Why should not that be placed?

Mr. HOLBROOK. The maximum limit in that case is checked by the clear space between the graduations. In other words, the scale is required to have a certain minimum space for an ounce graduation, and this is not to be measured from center to center of the lines,

but from the inside edge of one line to the outside edge of the other. Now, if they should make that graduation very broad, they would still have to have the minimum space specified, and as a result they would have to have such a wide travel for their indicator they would not be able to get a sufficient number of graduations on their chart. Therefore it seems that that limits it in one direction sufficiently.

Mr. JOHNSON. Mr. Chairman, I am afraid my motion has gotten lost. I made a motion to substitute, in paragraph 3, under the heading "Milk bottles," one-eighth of an inch for one-quarter of an inch.

The CHAIRMAN. I think your motion was ruled out of order.

Mr. JOHNSON. I think that was another motion that was ruled out of order. I am a little persistent in this matter, but I have given almost a month's time to the preparation of specifications and tolerances on this subject, and I have gone into a great deal of detail, and I know from a practical point of view in this matter that I am absolutely correct.

We have only two bottle factories in California, and all the bottles coming into the State are manufactured in the East, and when they come into my territory they are beyond the tolerances established. If such a thing be permitted, it is going to confuse the conditions in the State and cause a good deal of hardship on the milkmen and confiscation of property.

The CHAIRMAN. Do you wish to make a motion to that effect now?

Mr. JOHNSON. Yes.

(The motion was seconded.)

The CHAIRMAN. Your motion is to fix this at one-eighth inch instead of one-quarter?

Mr. HOLBROOK. I would like to make one statement, and that is that this conference has already passed on this matter twice—once when this specification was taken up last year and once when the model law on weights and measures was adopted. In the latter case it was adopted in a different form, since it provided in this case the bottle should hold its correct capacity when measured to the bottom of the lip, which is defined as the heavy glass ring at the top of the bottle. Yet this is but another way of saying the same thing, because on an ordinary bottle the bottom of the ring is about one-quarter of an inch from the cap seat. When the milk-bottle section of the model law was passed it was examined, and when this specification was passed it was reexamined, and it was believed for the protection of the purchaser that this distance was necessary. That was believed by the tolerance committee and by the conference on weights and measures. I believe last year when this specification was adopted there was some representative of the Glass Blowers' Association here, and, although the glass blowers look pretty jealously after their interests, there was no objection made to the specification as it now stands.

The CHAIRMAN. The motion, if carried, changes the specifications. If voted down, it leaves them as they now stand. All those in favor say aye, contrary no.

(The motion was defeated.)

The CHAIRMAN. Are there any other points you wish to bring up?

Mr. LINCOLN. Under the heading, "Scales, general specifications":

All scales shall be of such construction that they are reasonably permanent in their adjustment and will repeat their weight indications correctly, and are not designed to or may not be used to facilitate the perpetration of fraud.

Those words "or may not be used to" should be stricken out, to my mind. You can do something to nearly every type of scale on the market to make them weight incorrectly and still balance at zero.

The CHAIRMAN. I think, perhaps, the committee have in mind that any changes made should be apparent.

Mr. CONNORS. There are two things there which the committee considered, and we decided to incorporate them in one word, "facilitate" means "to make easy." We could have said "make easy the perpetration of fraud." We did not want a scale to be used that would make easy the perpetration of fraud on the consumer.

Mr. REICHMANN. That very wording has been used in the English law for years and years.

The CHAIRMAN. It seems to me the intent of this is pretty clear. Are there any other points?

Mr. UMPLEBY. Mr. Chairman, there is a matter with which I have a good deal of trouble. I do not know whether I am right in my opinion or not, and I therefore want information. I live in a county in Indiana just across the State line from Illinois, where we have 6,000 to 10,000 automobiles on every Sunday that come from Chicago. That necessarily means a lot of gasoline pump stations along the road, and I have a good deal of trouble with those pumps. I took the matter up with the pump man, and he told me that in England they had a glass scale on top of the pump and it was graduated in 1, 2, 3, 4, and 5 gallons. He said it was not required to be used in this country. I believe it could be brought about so that there would be a gauge put on top of a gasoline tank, which would be incased in metal, and in that manner lots of fraud would be prevented. Gasoline does not sell at a high price, but there is a tremendous amount of it used.

The CHAIRMAN. Do you wish to make that suggestion to the tolerance committee?

Mr. UMPLEBY. No. I wanted information, to know if they had ever considered that. The only information they give on that is in regard to sealing pumps, and I do not think it does a bit of good to seal the stop on those pumps. My idea is, if it could be demanded, that they should be made to put a receptacle up there with a gauge on it so that the consumer could see whether there were 5 gallons pumped up, and then the valve released and the gasoline allowed to flow into the automobile. He would then know he was getting the right amount. I know of a case where a man was charged for 22½ gallons when his gasoline tank only held 15 gallons. I also know that there is not one out of a dozen pumps that is correct.

Mr. REICHMANN. The committee on tolerance only takes up such weighing and measuring devices as are in existence. Clearly they would not consider such a proposition as that because they are not in use. If the gentlemen were to get up something like that, the board of tolerances not having power of a board of control, he could not have anything said about it by the committee until the next conference.

The CHAIRMAN. I think myself that it is more in the nature of a suggestion to the committee and that is why I raised the question a while ago. I am very glad the gentleman brought up that question to start you thinking. There is no doubt in my mind but what they ought to be looked into. If there is anyone here who has given this particular attention, we will be glad to hear from him.

Mr. AUSTIN. Mr. President, we perhaps have more gasoline pumps in the city of Detroit than anywhere else, and my experience tells me that you can not keep them sealed to assure any accuracy in the measurement. I have required every gasoline station to have in its possession a sealed measure, and I insist that the proprietor sees to it himself that his pump gives the required measurements. If, upon complaint, we find that he is delivering gasoline to consumers and his pump is giving false measure, we prosecute. The idea of keeping that number of pumps adjusted and keeping them sealed is almost impossible.

The CHAIRMAN. If the conference thinks more information is needed for that type of apparatus, I think we could arrange for an investigation at the bureau.

Mr. BARNARD. I have had some experience with gasoline pumps, and I wish to concur with what the gentleman has stated. I have gone to this precaution in testing gasoline pumps: I have bored a hole through adjustments and put a seal through there, so that it would be almost impossible to change the adjustment without breaking the seal, and I have found the pump to be off somewhat within a week. So I have taken this precaution, that the minute a man has a complaint that his pump is off, he should call my attention to it and I would go and test it, and in order to impress it on his mind that he should pay particular attention to his pump, I have made it my duty to tell each man that occasionally I was going to send a man around with a 5-gallon testing can to buy 5 gallons of gasoline, and it would be better for him to see that that man got 5 gallons instead of getting a little short. I have sent a few around who have always gotten 5 gallons, and each of the proprietors of these pumps has paid particular attention to the pump and tried to keep it in condition, because every time they see a man come up with a can they do not know but what he is the man I was sending.

Mr. UMPSTEAD. As a matter of fact, in Philadelphia we do not construe a pump to be a measure. We insist that where gasoline is sold, whether a pump is used or not, that they equip themselves with standard measures and sell by measure only. We have found that pumps are not accurate and can not be kept accurate or made accurate.

Mr. UMPLEBY. These pumps are queer machines; I do not care how accurately they are tested, they will give short measure after being used for a certain length of time. I do not believe it is possible to make these people measure gasoline out into a gasoline measure and pour it into an automobile. All I ask now is that the bureau investigate this. As I said, in England they can see this gauge on top of the tank. If that was put up there any person could look at it and see whether it served 5 gallons or not. I think that is a practical attachment.

Mr. LINCOLN. Possibly I can answer why there is some short measure in gasoline. I investigated a carload last winter and the man claimed to have 105 gallons more in the car than the capacity

of the car. On taking the matter up with the Standard Oil Co., they said they billed their gasoline out at 60°, and it expanded when it got warmer. It heats and swells and they are afraid they will get too much in there and it will burst the tank.

Mr. CONNORS. The device Mr. Umpleby speaks of, to the best of my knowledge, is not on the American market; it is made in Sweden, a glass jar holding 5 gallons. It is impossible for the committee to make arrangements for apparatus that is not on the market. When it gets on the market it will be the duty of the committee to go ahead and make specifications for it. We found the laws in many of the States required the sealer to test and seal pumps, therefore the tolerance committee felt it their duty to make specifications with regard to pumps and treat them as measures.

Mr. SHERMAN. I wish to ask for advice, either from the chair or from the conference. In the District of Columbia we are not required to test pumps, but in the District there has been a great demand from owners of measuring pumps for tests, because it facilitates their work and they can accomplish more per hour, and it increases their efficiency. We have been doing that. We realize when we test a pump that it is, in effect, putting into service a type of measuring apparatus which will not be as accurate in the long run as when it is measured out, but we felt when we began doing the work that the saving of time in the community was enough to pay for that extension of risk. I want to get the advice of the conference, or of the chair, as to whether we should do that or whether we should not. What is the sense of the meeting on that subject?

The CHAIRMAN. I am not sufficiently posted to answer your question. I would be a little doubtful as to whether you should seal it. I think, as a matter of information, if a man wants his apparatus tested, you should do so and help him out, but the question of sealing is another matter entirely.

Nearly everyone here is vitally interested in this question, and I think it is a good time to discuss it. So far as is possible, the bureau will look into that this coming year. Are there any further points in this matter? Since you have started out on this line of discussion there are one or two important things which should be done. Mr. Holbrook has suggested to me that we have not as yet read the manufacturers' criticisms or suggestions, and I think perhaps that ought to be done now, as you ought to be acquainted with them, and unless there is objection I will ask Mr. Holbrook to read the criticisms.

Mr. CONNORS. I want to read as far as we have gone on definitions.

The conference last year instructed the committee to prepare a list of definitions of all scales, and while the committee then thought it was a very easy matter, they were sorely up against it in trying to carry out your instructions. We have not a definition for counter scales as yet and we do not want to complete the definitions until we have a definition for counter scales. I would like to read as far as we have gone.

(Mr. Connors then read some tentative definitions of various types of scales.)

Mr. HOLBROOK. I would like to ask a question of the convention. Would you consent to the tolerance committee completing these definitions and perhaps putting them in somewhat better English than

they are at the present, and including them in the report that will be published in the next proceedings?

Mr. REICHMANN. The tolerance committee can not do that until their report goes to the next conference.

The CHAIRMAN. No; they could not handle that before the next conference meets.

Mr. HOLBROOK. This is not a tolerance, and it is not a specification. It certainly would not affect any member of the conference, it could not affect any manufacturer, and it would tend to make the subject a little clearer than it is now. Last year the conference advised or directed the committee on tolerances and specifications to make certain rewording throughout the report, without changing the meaning of the report. To include a number of definitions in the report is certainly not changing the meaning of it, and if the conference desires I think we could readily include these in the same manner as we did last year.

Mr. HOWELL. I move that the request be granted.

(The motion was seconded and agreed to.)

READING OF MANUFACTURER'S COMMENTS AND OBJECTIONS TO REPORT, AND DISCUSSION THEREON.

Mr. HOLBROOK. We sent this report out to the manufacturers and told them if they would submit criticisms thereon they would be considered by the committee and by the conference. We received those replies very late. The committee did consider all of them, but on the ground that the committee might not have been able to give them all the consideration they deserved, it is deemed only fair to the manufacturers to take up the report, specification by specification, and read their objections to each, to see if they appeal to the conference any more strongly that they did to the committee. Before I do that, I might mention one more thing which the committee has agreed to. This is a very slight change to be made in the second paragraph, under the heading of "Scales, general specifications," which reads, in part:

> When one reading element is for auxiliary use only, this need not be included in the sum, provided that it does not exceed 1 per cent of the sum.

A certain manufacturer has suggested that that should be made 2 per cent of the capacity of the scale, and upon examining some of the beams it seems perfectly fair to make this change and, so far as the actual meaning goes, it make no material difference. Therefore the committee suggests that that be done.

Mr. FARRELL. Is there any objection to giving the name of that particular manufacturer?

Mr. HOLBROOK. I think there is, because there has been very serious objection to that in the past, on the ground that the name of any manufacturer appearing in a conference report was an advertisement of that manufacturer.

The CHAIRMAN. Mr. Farrell, I want to state here that the bureau received a few days ago one of the most bitter letters that it has ever received from a manufacturer, because in last year's report one of the cuts illustrated the scale beam of a particular make of scale. If there is anyone in this conference that ever interpreted it in that way I should be greatly surprised. Not only did the letter come to me

but it went to the Secretary of Commerce, and the wording was such that if the Secretary did not take action the manufacturer would take it to a still higher court. We were practically demanded not only to suppress this issue of the report but that we should recall all copies that had been issued.

Mr. FARRELL. I withdraw my request, Mr. Chairman.

The CHAIRMAN. In these cases, while I do not agree with such things as that—I think that is silly—still on the other hand, the conference has been criticised on the ground that the sealers were not sufficiently considerate of the opinions of the manufacturers, who have always wanted to come into the conference. The committee has always taken the ground that they would be glad to hear what they had to say. I regret the specifications were not submitted earlier to them, but so far as I am concerned all these matters shall be submitted to the manufacturers. The manufacturer in the making of the scales runs across difficulties and we may know them, but he does not think so. We will get the best results if we work hand in hand.

Mr. REICHMANN. I move that Mr. Holbrook's motion to change 1 per cent to 2 per cent be adopted.

(The motion was seconded and agreed to.)

Mr. HOLBROOK. The first specification to which the manufacturers have filed an objection is specification No. 2, under the heading "Scales. General specifications." The intent of the specification is that the capacity shall be marked upon the scale. It reads as follows:

2. All scales not equipped with a beam or reading face graduated to the full capacity of the scale, or those not equipped with a graduated beam or reading face, which, taken in connection with another graduated beam or beams or with a graduated runner, indicates the capacity of the scale, shall have the nominal or rated capacity conspicuously, clearly, and permanently marked upon them.

The manufacturer writes as follows:

You probably are aware that the State of Wisconsin practically adopted the previous report of the tolerance committee and embodied the same in the Wisconsin specifications. You may or may not be further aware that after their experience with these specifications they have seriously considered abandoning this feature. Quite likely you will hear from the State of Wisconsin, but, in view of any report we have had of their experience and intention, it would seem to us that this item should be further considered, in view of the experience of Wisconsin.

Mr. DOWNING. With regard to this specification concerning the capacity on the scale, the State of Wisconsin is in favor of that regulation in so far as it applies to new scales, but we are not in favor of having such a regulation as this retroactive, and that is, perhaps, where the misunderstanding is. It is not the function of the sealer of weights and measures to place the capacity on the scales that are already in use, for it is an impossibility for the sealer to determine what that capacity is; that should be done by the manufacturer of the scales and not by the sealer of weights and measures. But in so far as new scales are concerned we believe the capacity should be placed upon the scales.

Mr. HOLBROOK. In all cases in which the committee has not changed the specifications it was their opinion that the objections were not well taken.

Mr. REICHMANN. You have already adopted all of those specifications.

Mr. HOLBROOK. We desire that the conference consider the manufacturers' objections, inasmuch as the committee sent out a letter and said those objections would receive consideration and the committee had only a very short time to consider them. Is it the pleasure of the conference that these objections be read?

The CHAIRMAN. You may proceed with the reading of the objections.

(Mr. Waldron, of New Jersey, vice president, at this point assumed the chair.)

Mr. HOLBROOK. The second objection is to specification 7, under the heading "Scales, general specifications," which reads:

> Plates or caps used to limit the longitudinal motion of the knife edge shall be smooth and be made of a material at least as hard as the knife edge. The part of the knife edge liable to come in contact with these caps or plates shall be so formed that the friction between them is reduced to a minimum.

The manufacturers' objection reads:

> Theoretically hardened steel friction caps are better than cast iron or chilled iron, and on large scales, like railroads, we should favor their adoption. On small scales, like counters, trip, etc., we question whether the practical advantage would correspond with the added expenses. Of course, it must be borne in mind all the while that in the end the consumer has to pay for increased costs, and, so far as possible consistent with good results, we favor keeping this cost as low as possible.

I might say the specification does not mention "hardened steel friction caps," but only something which is as hard as a knife edge. Therefore we think that that objection is not well taken.

(After a pause.)

The next objection is to specification No. 13, under the same heading. This specification reads as follows:

> Each main weight graduation on a beam shall be so marked as to indicate the weight represented by the poise at that point.

The objection of the manufacturer is in the following words:

> We call your attention to specification 13, on page 9, which may possibly be drawn to represent something different from what the language covers. If our interpretation of the wording is correct you would require that each graduation on a beam or reading face should have marked opposite the same the full value of the weight indicated when the poise is placed at that graduation to represent a platform load. If our understanding is correct you can see that that is physically impossible, on account of space limitations, and to illustrate this point we are inclosing full-size drawings of the graduation of face plates on our railroad and compound beams, and also full-size graduation of the portable scale beam. On the smaller classes of scales a graduation of 20 to the inch is not at all uncommon, and a compliance with the strict reading of this specification, as we interpret the same, would be impossible. A correct interpretation of this specification might depend upon what is meant by "each main weight graduation" on a beam, i. e., 1 pound, 10 pounds, or 10,000 pounds.

The committee thinks the words "main weight graduation," cover that matter, and that the sealer will use his judgment as to what is a main graduation in the case of each beam, and therefore will not require marks which would be physically impossible. For instance, on a 100,000-pound beam the main weight graduation might be 10,000 pounds and on a pound-and-ounce beam the main graduation might be a pound. We think the specification is clear enough. Last year they might have had a legitimate objection because it required every graduation to be marked, but this only requires marking of each main weight graduation.

(After a pause.)

The next objection is to specification 22, under the same heading. The specification reads as follows:

No scale shall be equipped with an unstable or accelerating beam.

The manufacturer's objection reads:

As a matter of fact automatic grain scales, so called, are necessarily equipped with accelerating beams, but with this exception we concur in the suggestion.

I am not fully satisfied that it is necessary to have an automatic grain scale equipped with an accelerating beam. Is there anybody here who desires to talk about that?

Mr. Van Duyn. Mr. Chairman, as many members of the conference know, the Western States have many automatic grain scales in operation and much depends on the installation of those scales. Wherever you find an automatic grain scale working, and the brushes of that scale have become somewhat worn, so that those brushes do not cut off the flow of the grain at once to what is called the dribble stage, when the scale is almost filled, too much grain will naturally sift through, resulting in overweight. If the scale is not equipped with the hopper above, that will keep a full flow of grain coming into the scale, errors will be produced. For instance, if a uniform flow of grain is not insured the dribble stream, which should contain, for example, 10 pounds of grain in the suspended column, may contain but 5 pounds of grain; and when the cut-off occurs, instead of 10 pounds being added to the scale as should be the case, but 5 pounds of grain will be added, and the scale will be 5 pounds short. You will find that in the case of a great many of these scales installed in top of the elevator there is no room for the large hopper or a feed-supply hopper that will keep a full stream of grain flowing at all times, and this fact should be kept in mind by those of you who have to deal with that kind of scale, because many of those scales, when ready to dump, will dump from 3 to 5 pounds short. They are usually set to dump at 300 pounds or 5 bushels, and in this case each bushel of grain dumped through that scale will be 1 pound short.

I bring this subject to your attention for the reason that it is one worthy of consideration, and the points outlined will be of benefit to you when you test this class of scales.

Mr. Sherman. Do I understand that the gentleman who just spoke was speaking on behalf of this section 22, or on behalf of the suggestion or protest made with regard to it?

Mr. Van Duyn. I was not speaking on behalf of the objection, but I was just bringing a concrete example before the men who are here at the conference who have to do with that class of scales, in order that it might help them in that work.

Mr. Johnson. This is a very interesting matter, and inasmuch as I came here from California, I, for one, want to try to absorb as much information regarding apparatus as possible. I believe that the man who is practical in this particular line should have the privilege of a few moments on the floor, and I beg to move that the rules be suspended and that a gentleman who is the representative of a manufacturer be permitted to be heard.

Mr. Reichmann. The gentleman referred to has had more experience and is more able to answer the specific question that Mr.

Holbrook asked than probably any other man in the United States. Therefore, Mr. Chairman, I heartily second the motion of Mr. Johnson.

Mr. SHERMAN. Mr. Chairman, I agree with Mr. Reichmann, I would like to hear what the gentleman has to say, but I want to know, as a matter of practical information, where will the line be drawn if we throw the bars down.

The ACTING CHAIRMAN. We would have a new precedent, so far as I know, gentlemen.

Mr. REICHMANN. If you want to get around it, I move that we adjourn and convene again in 15 minutes.

(The motion was seconded and agreed to and a recess was taken for 15 minutes.

At the expiration of the recess the conference reassembled.)

Mr. SHERMAN. Mr. Chairman, I notice a piece of scale-advertising matter has been distributed on the chairs, which we find very interesting and I am glad to get it, but as I understand such action has been tabooed in the past, I want the session to put something in the minutes to indicate that that sort of thing is not wanted.

Mr. FARRELL. Has the conference any charge over this room?

Mr. SHERMAN. I do not know of any.

Mr. FARRELL. I would suggest that that matter be taken charge of by the people in charge of the room, rather than the conference.

Mr. VAN DUYN. In reference to paragraph 21, under the heading, "Scales—general specifications," I would like the members of this committee to make a little explanation of that section, as it is not clear to me and I came here for all the information I could get. I would like to have the committee explain the proposed level line of the beam as described in section 21.

Mr. CONNORS. Let me say that, as to that, the first specification made in reference to the subject two years ago required that the normal position of all beams be horizontal. It was called to our attention after the specifications were adopted that there were a number of types of scales in use in which the normal position of the beam was on an angle and that in some of the types this position was a proper one. Therefore we recommended at the conference last year, when we adopted this specification, that when the scales are equipped with a beam, the position or oscillation of which is used to indicate the balance of the scale, the normal position of the beam should be horizontal and have equal play above and below its normal horizontal position. This excluded from the application of the specification the types which were satisfactory even though the beam was not horizontal.

Mr. REICHMANN. That is not necessary and is not good physics.

Mr. VAN DUYN. Mr. Chairman, I have one further question. Suppose we are testing a railroad track scale, or a wagon scale, if you please; where would the spirit level be used on the beam, or what line of the beam would be required to be the level line?

Mr. BRIGGS. I think I might be able to make a suggestion in reference to answering Mr. Van Duyn's question. I think the only line which would be considered would be the line along which the sliding poise moves, or the line from the fulcrum pivot to the knife-edge which carries the loose counterpoise weights. Recently in considering the question as to what error is introduced by tipping a scale as a

whole, we found out no error would be produced if the normal horizontal position of the beam is established by the line from the fulcrum knife-edge to the knife-edge which carries the counterpoise weight. This throws the knife-edge which connects with the levers of the scale above the horizontal line established by the other two knife-edges.

Mr. Van Duyn. There is nothing in this report of the committee on tolerances and specifications, as I see it, that indicates that the poise line and the pivot line should be parallel.

Mr. Briggs. I do not know; that is for the committee. We are familiar with certain things, for instance, the sensibility will change with the load. If the sensibility is to be the same for a given load independently of which counterpoise is used, the requirement is that the line established by the fulcrum pivot to the counterpoise pivot shall be parallel to the line along which the poise slides; otherwise you will get one sensibility when a loose counterpoise weight is used and another sensibility when the sliding poise weight is used in making a weighing.

The Acting Chairman. Do the members care to hear any more of these criticisms from manufacturers? [After a pause.] It appears they do.

Mr. Holbrook. The next objection filed is to the third paragraph of the definition of "sensibility reciprocal" when taken in connection with other paragraphs of the report. The paragraph reads:

In the case of scales with stabilized pans or plates, such as equal-arm trip scales and scales with a single pan or plate above the beam, and also scales with a pan or pans hanging from the beam, which are not provided with a pointer moving over a graduated arc or scale, the sensibility reciprocal is the amount of weight required on the pan or plate to cause it to move from its position of equilibrium when the scale is in balance to a position of equilibrium at the limit of its motion.

The manufacturer's objection reads:

This taken in connection with the minimum fall as indicated on the bottom of page 16 ["Counter balances and scales." Specification No. 6] makes a pretty severe requirement. In the first place, we have believed that on 12 to 25 pounds one-half inch fall was ample, and on 26 pounds thirteen-sixteenths inch ample. With the increase in the fall and the sensibility reciprocal adapted to this increase it makes the requirement somewhat difficult to conform to. We suggest that it be changed to one-half the fall instead of the full fall.

I will say that the committee measured up a number of scales and considered the change in balance of the beam, the inclination of the beam, etc., when that specification was made in the first place, and that this objection is not such as to induce them to change their position on the matter, since they still believe that the definition and specification are proper.

[After a pause.]

The next objection is made to specification No. 8, under the heading "Platform scales." This specification reads as follows:

8. All devices for adjusting the balance of a counter platform scale shall be of such construction that they are operative or accessible only by the use of some tool or device which is outside of and entirely separate from the movable mechanism of the scale itself, such as a screw driver, wrench, etc., but not an adjusting pin.

The manufacturer's objection reads:

* * * You have referred to an "adjusting pin." We are inclosing a blue print showing the —— standard method of applying adjusting devices for ob-

taining the balance of beams. On some of these you will notice that instead of using a wrench or screw driver we have provided holes in which a device of some sort might be inserted for the purpose of rotating the rod and thereby moving the ball for balancing purposes. We assume that such a method as last described would come within your specifications, inasmuch as we employ a tool or device which is outside of and entirely separate from the movable mechanism on the scale itself.

The tolerance committee does not consider that an adjusting pin is satisfactory. One would not have to use any special "tool," such as a wrench or screw driver, since it could be adjusted with a nail, and, moreover, this nail could be left in the hole, in which case the device would be just as readily adjustable by the hand as if there was a knurled-headed screw provided.

Mr. Reichmann. In other words, the committee makes a distinction between using a nail or adjusting pin or a screw driver. Instead of a screw driver I can use a key or a pocketknife. Why can't they use a nail, which is an outside device? Why should they not use an adjusting pin? I move you, sir, that the words "but not an adjusting pin" be stricken out of specification No. 8, under the heading "Counter scales," on the ground, Mr. Chairman, that an adjusting pin is as much an outside mechanical device as a screw driver. A screw driver is no definite, specific, mechanical tool; it is anything which has a point sufficiently blunt to be inserted in a slot of another machine called a screw; it may be a hatchet, an ax, or a tool with a handle, a pocketknife or pruning knife, a key, or anything. Why should a man have to use an outside tool to make the adjustment? Why should there be specific objection to an adjustment pin? I know absolutely that the committee did not wish any prejudice against any manufacturer, but it does seem we are ruling out the simplest possible tool.

Mr. Connors. The committee took that matter under consideration, and we investigated a number of scales equipped with a blind-headed screw with a hole through it, and found out that in a good many cases, especially on counter scales, that a nail was put through the hole and kept there all the time. Accordingly, the State sealers of many States require that that hole be threaded and a small screw be put in there, so if a man wanted to change that in a hurry he would have to take out that screw and use an outside instrument in doing so.

Mr. Reichmann. I doubt whether the members of this conference can cite one-half dozen instances where they found a nail left in a screw with a hole through it for the purpose of adjusting a scale. Mr. Connors says the committee has investigated and found a number of such cases.

Mr. Umpleby. I have in mind one scale that has this hole for the purpose of inserting a nail to level the scale, and they overcome the objection by putting a pin cap over that. That does not seem to be any hardship on the manufacturer, and I believe that in their case, where there is an easily operated device and there is a possibility of leaving the nail in it, they should be compelled to cover it as in this requirement. There is a particular scale on the market where they have an opening for a nail to go through, and I require them to put a cap over it, and they have made a cap to overcome this objection.

Mr. WILLETT. We have adopted this specification, and the manufacturers have readily complied with it. We do find, in Indiana, a great many cases where a nail is inserted and the scale is put out of balance readily. We are insisting in Indiana in having a cap put on. This prevents somebody coming into the store and changing the setting of the scales.

Mr. REICHMANN. I have not heard of half a dozen instances of finding screws.

Mr. CONNORS. We found them in Ohio and in Indiana.

Mr. REICHMANN. Where?

Mr. CONNORS. We found them in Columbus and in Indianapolis. I do not think the committee's word ought to be doubted here.

Mr. WILLETT. Mr. Chairman, the motion is out of order. The specifications have been adopted as read and by Dr. Reichmann's own motion it is out of order. Up to this time Dr. Reichmann's own motion has prevented these motions from coming up.

Mr. REICHMANN. I stand corrected. Mr. Willett is right.

Mr. FARRELL. I move you that we adjourn.

(The motion was seconded and agreed to.)

(Thereupon, at 5.15 o'clock p. m., the meeting adjourned to meet at 10 o'clock a. m., Friday, May 28, 1915.)

SECRETARY'S NOTE.

As shown in the foregoing, the committee on tolerances and specifications started to read the objections and suggestions to the advance report of the committee made by various manufacturers in writing, in the order that the specifications to which they referred occurred in the report, and continued to read until interrupted by the adjournment of the session. At the time that the motion to adjourn was introduced and carried there still remained a number of suggestions and objections which the committee had not had time to read. During the next and last session so much business remained to be disposed of that it was impossible to take up the matter again. In view of this fact, it is deemed best to incorporate the remainder of the suggestions and objections and the committee's explanations and answers in this report. Accordingly, this matter has been arranged in Appendix 2 (see p. 220, et seq.), the same order of presentation being observed as is mentioned above. The objections presented include all those which are specific and which refer to definite tolerances and specifications contained in the advance copy of the report.

The tolerances and specifications, as adopted, will be found in Appendix 1, page 193.

SIXTH SESSION (MORNING OF FRIDAY, MAY 28, 1915).

The conference reassembled at 10 o'clock a. m. at the Raleigh Hotel.

DISCUSSION OF ASHBROOK BILL.

The CHAIRMAN. The first item on the program is "legislation," and a number have expressed a desire to take up at this time and discuss the Ashbrook bill. You are all sufficiently familiar with that and with the principles of it. It is not necessary to go into details, but you can just discuss it on the general principles. I would like very much to have a little time this morning to hear from the city sealers, as there are several here who have rather interesting and important things we want to hear. Thus far they have not had an opportunity to be heard. There are four or five who have called my attention to the fact that they have rather interesting statements to make. A number of delegates have expressed a desire to get away this afternoon; therefore I think if we hurry along we can finish with the morning session. We will proceed to the discussion, and I would like to have a few clean-cut statements in regard to the bill. The point at issue is whether or not the conference should get behind and support the bill.

I have been asked a good many times during the year as to the attitude of the bureau. Of course, the attitude of the bureau will always be for the thing that is right and best. It is our disposition not to meddle with those things that belong to the States, but there are a few things that ought to be national in character, in order that you may have uniformity and in order that you may have what is still better, an authority back of you and a precedent in your own State to avoid a political situation. The bureau is not committed to this particular bill, but we approve of the principles of it. The Chair will listen to the discussion.

Mr. STARN. Mr. Chairman, might I ask if it would not facilitate matters greatly, relative to the subject in question, if we can do away with the discussion and have the bill read by our secretary and vote without discussion? If the bill was read by the secretary I would know how to vote according to my conviction. Any argument we could produce here—and we could talk until this time next week—would not change the mind of, perhaps, three men. Therefore I move you, sir, that the bill be read by the secretary and a vote taken, without discussion, and then let the consensus of this convention be placed before the congressional committee or the proper parties. I offer that as a motion to facilitate.

(The above motion was duly seconded.)

Mr. REICHMANN. Mr. Chairman, I dislike to arise to disagree with that motion, but it seems to me that you should not only have the evidence but the arguments on both sides. I think it would be an unwise thing for this conference to simply have the bill read and a

vote taken without at least a few statements relative to the pros and cons. I hope the motion will not prevail.

The CHAIRMAN. Are there any further remarks? Those in favor say "aye," opposed "no."

(The motion was lost.)

Mr. SHERMAN. I move that the bill be read by the secretary before the discussion opens.

(The motion was seconded.)

Mr. FARRELL. The discussion of so vital a question which brings us really back to the foundation of this Government, and the power of Congress to pass such a bill, and the reading of excerpts from the fathers, who voted at or about the time of the foundation of this Government, would be interminable in a meeting of this kind. I do not believe that the sealers themselves have gone into the question as thoroughly as some who are rather interested. I would suggest that it would be a good thing to discuss the bill to-day, but that no vote be taken on it until the next conference.

The CHAIRMAN. Are there any further remarks?

Mr. SHERMAN. It seems to me that is a little off the question of my motion. My motion was simply that before we discussed this, whether we are going to vote on it or not, we ought to know what it is. We ought to have it read before anybody can discuss it intelligently and expect to be heard intelligently.

The CHAIRMAN. The motion is not as to whether we shall discuss it or take a vote, but simply whether it shall be read before we proceed to discuss. Are there any further questions? Those in favor say aye, contrary no.

(The motion was agreed to.)

The secretary, at the direction of the chairman, read the Ashbrook bill as follows:

[H. R. 16876, Sixty-third Congress, second session. In the House of Representatives. May 27, 1914. Mr. Ashbrook introduced the following bill, which was referred to the Committee on Coinage, Weights, and Measures and ordered to be printed.]

A BILL To regulate and control the manufacture, sale, and use of weights and measures, and to be known as the weights and measures act.

Be it enacted by the Senate and House of Representatives of the United States of America in Congress assembled, That the standard of weights and measures throughout the United States shall be the weights and measures supplied by the United States Government under joint resolutions of Congress, approved June fourteenth, eighteen hundred and thirty-six, and July twenty-seventh, eighteen hundred and sixty-six, and such new weights and measures in addition thereto or renewal thereof, and in conformity therewith, as have been or shall be established by the several States, Territories, and the District of Columbia, and approved by the Bureau of Standards.

SEC. 2. That the Bureau of Standards shall have authority to approve and shall approve the various types of weighing and measuring devices which may lawfully be used in trade and commerce throughout the United States: *Provided*, That such types shall conform to the standards provided for by section one of this act, or multiples, subdivisions, or derivative values thereof: *Provided further*, That no type of weighing or measuring device need be approved if intended for shipment to any foreign country when made in accordance with the specifications or directions of the foreign purchaser; but if said device shall in fact be sold or offered for sale for use in trade or commerce within the United States, then this proviso shall not exempt such device from the operation of any of the other provisions of this act. And the said bureau shall approve any type of weighing or measuring device submitted to it for approval by any person if such type shall be of such design or construction as to give correct results in terms of standard weight or measure or values derived there-

from and is not conducive to the perpetration of fraud; and such submission may be by sample, drawing, description, and specification, or in such other manner as may be prescribed by the regulations provided for by this act. If the type of device submitted shall be approved, the said bureau shall furnish a certificate to that effect to the person submitting such type. In case the said bureau shall disapprove any type of weighing or measuring device submitted to it as aforesaid, it shall notify the person submitting the same of its decision, with the reasons therefor, and any person so notified shall be given an opportunity to be heard in support of his application, and if, after hearing, the bureau's decision shall still be adverse, the applicant may take an appeal to the Secretary of Commerce, whose decision shall be final.

SEC. 3. That the Bureau of Standards shall register and give a serial number to each type of weighing or measuring device approved, as provided in section two hereof, and shall, under the regulations hereinafter provided for, publish from time to time a list of such approved types, with a brief description and the serial number of each type. Copies of such lists shall be furnished, under the aforesaid regulations, to duly authorized weights and measures officials and to manufacturers of weighing and measuring devices throughout the United States.

SEC. 4. That it shall be unlawful for any person to manufacture, sell, or offer for sale, convey or offer to convey to another, free of cost, ship or offer or deliver for shipment, or have in possession, for use in trade or commerce, or use in trade or commerce or in the collection of tolls or duties charged according to weight or measure, any weighing or measuring device the type of which has not been approved as required by this act; and any person who shall violate any of the provisions of this section shall be guilty of a misdemeanor, and for the first offense shall, upon conviction thereof, be fined not exceeding $100, and for each succeeding offense and conviction thereof shall be punished by a fine not exceeding $500, or by imprisonment not exceeding one year, or by both such fine and imprisonment, in the discretion of the court.

SEC. 5. That all weighing and measuring devices hereafter manufactured or constructed for use in trade or commerce within the United States shall have stamped, engraved, etched, or otherwise marked thereon, in such manner as may be prescribed by the regulations authorized by section eight hereof, the name of the maker or manufacturer and the serial number of the approved type to which it belongs; and any person manufacturing or constructing any such device who shall fail to mark the same as provided for by this section shall be subject to a penalty of $50 for each such device which is not so marked: *Provided*, That whenever it shall appear to the satisfaction of the Bureau of Standards or the Secretary of Commerce that any type of weighing or measuring device is so small as to render it impracticable to mark it as required by this section, the said bureau shall furnish a certificate to that effect to any manufacturer or maker applying for the same, and such certificate shall exempt such manufacturer or maker from the requirements of this section.

SEC. 6. That any person who shall fraudulently stamp, engrave, etch, or otherwise mark upon any weighing or measuring device the type of which has not been approved as required by this act any name, number, or other mark, with intent to have such device appear to be an approved type, shall be guilty of a misdemeanor, and shall, upon conviction thereof, be punished by a fine of not more than $500 or by imprisonment not exceeding one year, or by both such fine and imprisonment, in the discretion of the court.

SEC. 7. That the district courts of the United States shall have jurisdiction of all offenses under this act committed within their respective districts. And it shall be the duty of each United States district attorney to whom satisfactory evidence of the violation within his district of any of the provisions of this act shall be presented by any duly authorized weights and measures official of the United States, or of any State, Territory, or the District of Columbia, to cause appropriate proceedings to be commenced and prosecuted in the proper court of the United States without delay for the enforcement of the penalties provided for herein: *Provided, however*, That no action or prosecution shall be brought against any person for any violation of this act unless the same is commenced within one year after the offense is committed.

SEC. 8. That the Bureau of Standards, with the approval of the Secretary of Commerce, shall prescribe regulations, not inconsistent with law, for carrying out the provisions of this act, and shall, with the approval of the said Secretary, fix and establish reasonable variations and tolerances which may be allowed in the types of weighing and measuring devices authorized by this act.

SEC. 9. That duly authorized weights and measures officials throughout the United States may test and verify all types of weighing and measuring devices approved as required by this act, and no others: *Provided, however*, That the approval of a type of weighing or measuring device shall not be construed as in any way interfering with the testing of individual weighing or measuring devices as provided by the laws of the several States, Territories, or the District of Columbia; nor shall the approval of a type be taken as evidence of the correctness of an individual weighing or measuring device of that type, or prevent any duly authorized weights and measures official from prohibiting the use of any such weighing or measuring device which is found to be defective.

SEC. 10. That the term "United States" as used in this act shall include all States, Territories, possessions, and the District of Columbia. The word "person" as used in this act shall be construed to import both the plural and the singular, as the case demands, and shall include corporations, companies, societies, and associations. The term "Bureau of Standards" shall be held to mean under or by authority of the Director of the National Bureau of Standards of the Department of Commerce. When construing or enforcing the provisions of this act, the act, omission, or failure of any officer, agent, or other person acting for or employed by any corporation, company, society, or association, within the scope of his employment or office, shall in every case be deemed to be the act, omission, or failure of such corporation, company, society, or association as well as that of the person.

SEC. 11. That this act shall be in force and effect from and after one year from its passage.

The CHAIRMAN. Before proceeding, I want to ask the secretary to read the first section again. There is a principle in the first section vitally different from the rest of it and I want to call your attention to that section.

(The secretary reread section 1 of the Ashbrook bill.)

The CHAIRMAN. Before proceeding with the discussion I wanted to call attention to the first section, as I think a great many are liable to miscontrue that. Congress will never delegate to the Bureau of Standards nor to any State the power to legislate for national affairs. Suppose a State buys a set of standards which have been approved by the Bureau of Standards. This would make them acceptable, and they could replace the old standards. If anybody construes that first paragraph to mean that because the State has adopted some other kind of standard or some other form that this act would make it national, then it would be a very great mistake. I do not put that construction on it at all. I take it that the purpose of the bill is to approve types of both weights and measures.

Mr. FARRELL. What is the definition of "type" as used there? I do not see any definition.

The CHAIRMAN. Congress would fix the standard pound, but it leaves to the bureau the determination as to the kind of weight that should be used.

Mr. REICHMANN. Is it not important to have a definition of the word "type"?

The CHAIRMAN. Yes; I think it is. I wanted to avoid your going off into a discussion that might not mean anything. I know from my experience with work in connection with the pure-food law and other laws, that Congress is very jealous of delegating to anybody the right to make laws. Congress only wants to give to any bureau or department the power to administer the law.

Mr. REICHMANN. Mr. Chairman, in order to bring out a discussion on this bill I would like to make a motion, following the remarks of Mr. Farrell. It appears very clearly from the statement of the chairman, the Director of the Bureau of Standards, who would cer-

tainly be a man who would be able to understand the meaning of a bill, that this bill itself is not clear in its meaning. A bill of such importance ought to have as its first qualification one of absolute clearness. The bill as drawn is exceedingly defective from a practical standpoint, though we are not arguing that. Therefore, I move you, sir, that a clear-cut bill be substituted for this, with an explanation of its meaning, to be reported to the next conference.

Mr. FARRELL. In seconding that motion I also would call attention to the fact that some years ago the National Government gave the State of New York some weighing devices, which consisted of three different even-arm balances. Under the law as it is drawn, these devices, which the Government gave us some years ago, are not embraced within the approval of the law. I second Dr. Reichmann's motion.

The CHAIRMAN. I want to state that the first paragraph is not obscure to me, but I was afraid that some of the members here had not realized exactly what it meant; that is, the wording here might lead one to believe that it leaves to the bureau the power to adopt certain standards because the States had adopted them; but the words "in conformity therewith" limits the meaning of the section in this respect.

Mr. SHERMAN. I wish to call attention to the fact that it will not be necessary to defer action for a year in order that difficulties in the wording of the bill may be ironed out, since we already have the assurance of consideration in the House committee, and the conference can, if it so decides, definitely act on this bill, favorably or against, specifically stating it is acting purely and only on the principles involved and not the phraseology of the bill.

The CHAIRMAN. I think it well, if you want action immediately, to state why. If you do not want immediate action on this, state why.

Mr. SHERMAN. I want action, for this reason: That a favorable consideration, whether it passes or not in the House this year, by the committee will greatly help the cause of weights-and-measures work both in the District of Columbia and in the surrounding States, to my knowledge.

Furthermore, I want to state that I would like to see favorable action taken here now instead of next year, because I took this bill immediately on receiving it to the man whom I believe to be the best lawyer on this sort of work in the District of Columbia, a man who has never once steered me nor my predecessor wrong, who interpreted the bill for me, taking these things——

Mr. FARRELL. Mr. Chairman, I rise to a point of order. There is a question before the House.

The CHAIRMAN. He is speaking to the question. The motion is to defer the bill, and he is trying to oppose the deference of it. I think that is all right.

Mr. SHERMAN. The lawyer stated, first, that the bill did not in any wise restrict the powers of any State or district department, but it would only, as he interpreted it, take off the market, where they would never come into contact with those departments, certain undesirable types. Secondly, that any State or the District of Columbia might go further in its regulations than the bureau would go, so long as it did conform to the minimum set by the bureau here.

Thirdly, that in his opinion there were no words or phrases used in that bill the definition of which should give any court of competent jurisdiction trouble to interpret.

For that reason, it seems, we are entirely safe in acting favorably here or in acting against the spirit of this bill and the idea involved in it, knowing, as we do, that the bill is to be carefully considered in the House committee.

Mr. EGAN. I think the District has had considerable consideration. That I feel is sufficient. I am in favor of Mr. Reichmann's motion, but I would like to have it go further. I think there is a vital principle involved in this proposed legislation, and I believe the members here will find that principle embraced in sections 7, 8, and 9 of this proposed law, if you will read them over carefully. I will not attempt to amend Mr. Reichmann's motion, but I wish it to go further. As has been suggested to me, I will offer an amendment that this matter be referred to our legislative committee for report to be made later on.

(The motion was duly seconded.)

The CHAIRMAN. You have heard the amendment and the second. Are there any remarks? The amendment is that this be referred to the legislative committee. All those in favor say aye; contrary, no.

(The amendment was rejected.)

Mr. EGAN. Mr. Chairman, I added a little more than you propose. Some of the members may be opposed to that amendment because it might appear that the committee, having this bill referred to it, might do what they pleased. I added to the amendment that the committee should have the consideration of this matter and report back at the next meeting. I think some of the members may have voted against the amendment on account of your having left out that feature. That does not take the matter up at this conference.

The CHAIRMAN. The Chair decided that the amendment was lost.

Mr. JOHNSON. I am speaking on the previous motion. I do not want to appear to take too much interest in this matter, but it occurs to me, after a very careful reading of this bill, that it contains a great deal of good. One of the points which it establishes without a question of doubt is that which we have been trying to do for all of these years, and that is to standardize weights and measures throughout the entire country. That has been the keystone of our endeavors for all these years, and this bill seems to do that. The bill also has a great many other good provisions, all being steps in the right direction for the benefit of weights and measures laws. When we have an opportunity of this kind I believe that we should be progressive, and not try to retard a bill of this character because it may have some little technicality which, perhaps, is not clear to a great many of us. Personally, I believe we owe a great deal to the Bureau of Standards, and I believe it should be the consensus of opinion of this conference to support that bureau in its endeavors along these lines when consistent with our views, as I believe this bill to be. I therefore sincerely trust that the members of this conference will, by their vote, recommend the passage of this bill, so as to influence Congress and to encourage the bureau in stimulating legislation of this character.

Mr. STARN. Mr. Chairman, the gentleman to my right has expressed my feelings to the letter. Before offering my motion at the

opening of the conference to-day I had read this bill carefully and believed that all of the delegates here had done likewise and were prepared to act without discussion. That was my reason for offering that motion. I only want to reiterate that the gentleman has expressed the views as I tried to express in the few words of my motion.

Mr. MARONEY. I did not quite understand the original motion and voted in the affirmative.

The CHAIRMAN. The original motion has not been put.

Mr. MARONEY. I mean the amendment, and I did not quite get it. I would like to change my vote and I know there are a number in my immediate vicinity who would like to do likewise. The Ashbrook bill does not appeal to me in its present form, but I would be glad to vote to put it in the hands of a committee.

Mr. REICHMANN. I made the motion in order to bring the matter properly before this conference for discussion. I think everybody agrees with what Mr. Johnson, of California, says. The question, however, is not as to our admiration of the work of the bureau at all. The question is whether it is wise for this conference to go ahead and say that we are for this particular bill or as I took the chair to state whether we are for the principle of the bill. We were not discussing the technicalities of the bill, and it must be evident to any one who has had any experience that this bill as it stands now could never be reported by a committee of Congress or any committee of intelligent beings, because it is so faultily drawn. It has the fault, in the first place, of not defining "type," which is practically the gist of the bill. What is a type of weighing or measuring device?

In the second place, it is faulty for the reason that the first paragraph establishes certain standards of weights and measures; then in the second paragraph it refers to weighing and measuring devices which are not referred to in the first paragraph and also includes the use of them. I know that as the bill is drawn at the present, that practically every scale manufacturer in the United States is opposed to it, with possibly one or two exceptions. The point at issue, as the chairman stated, is, are we in favor of the principle involved in this bill. Now, what is the principle involved? If the principle involved in the bill is the question of producing uniformity in weights and measures and methods of making tests of weights and measures, I think everybody is in favor of it. If the principle involved is to make every user of a weighing and measuring device which is faulty a criminal, I do not know whether all of us are in favor of it.

For that reason I think it is always safer to act upon a specific thing than upon the general principle unless we simply set up a line of principles which this conference favors. I think the proper motion would have been that this conference was in favor of uniformity without any question, that it is the object of the conference to bring about uniformity. The only question is, does this bill clearly state that principle? I think everybody agrees with Mr. Johnson, but I do not believe he is talking on the bill. The motion was in order to bring out this discussion, that this specific bill be referred to a committee appointed by the chair and be acted on at the next conference.

Mr. JOHNSON. Mr. Chairman, I believe that Congress acknowledges this organization as an authority on legislation of this kind. I do not believe it could be the policy of this conference to vacillate by postponing action on a matter of this kind. This matter undoubtedly will be referred to Congress before our next conference, and I believe we should either approve or disapprove of the bill. This idea of trying to sidestep a condition of this kind which so seriously affects us as a body, to my mind, is not good policy. I am personally of the opinion that we should meet this condition now and dispose of it by recommendation either for or against the bill as it is.

Mr. REICHMANN. As a point of personal privilege I arise. The gentleman from California mentioned one word, "sidestepping," which I do not like. I do not believe anyone here wants to sidestep a thing, but, as the chairman stated, we want to act simply upon the principle involved in this bill. The gentleman from California wants us to take action upon this specific bill and there are a number of delegates at this conference whose State associations have already taken action on this specific bill, some of them for and some against, and being good American citizens they are going to be controlled by the vote of their association.

There are two questions involved, as I tried to make clear, and I say it is not a question of sidestepping. Are we going to recommend this specific bill, which anyone can clearly show is full of errors, or are we going to vote on the principle. My motion was that this specific bill be referred to the committee for bringing out the defects or ironing them out, if you will.

Mr. HOWELL. In line with what Mr. Johnson said, in order to bring this matter before the meeting, and in order that no one will be accused of sidestepping, I move as a substitute to the motion that we disapprove this bill.

Mr. WILLETT. I think a motion to lay on the table would be in order, and I make that motion.

(The above motion was duly seconded.)

Mr. SWEENEY. What do you mean by "to lay on the table"? Do you mean to defer the consideration of this bill or just this motion?

The CHAIRMAN. It simply disposes of Dr. Reichmann's motion.

Mr. VAN DUYN. Does the laying of the motion on the table carry the subject matter with it? I think it does.

The CHAIRMAN. If that is the case it would be very unfortunate to have it laid on the table. If you wish to continue discussion on this matter, and I think it would be very unfortunate to cut it off, you should vote this motion down. You have heard the motion to lay this on the table. Those in favor say aye; contrary, no.

(The motion was defeated.)

The CHAIRMAN. The original motion proposed by Dr. Reichmann is now before you. The motion is to refer this specific bill to a committee with power to substitute another bill for it and to report to the next conference. We will dispose of this first, and then we can decide whether we want to take up the resolution denouncing the bill. You have heard the motion. Are there any further remarks in regard to it?

Mr. HANSON. Representing the great Commonwealth of Massachusetts, the Commonwealth which has been the pioneer in weights

and measures laws and the enforcement of such laws, I strongly oppose the laying over of this matter for another year, because we, as weights and measures officials of our great Commonwealth, in convention assembled in our great and prosperous city of Worcester last January, went on record as favoring the enactment of the bill which has been presented for action by us here to-day. We did this because we believed in uniformity of weighing and measuring types, and we also believed that this uniformity should not be vested within the respective States throughout the Union, because it would be a hindrance to manufacturers if every State official were allowed to adopt different rules and regulations or to serialize the weighing and measuring devices which have been manufactured throughout the country. As a business man of many years standing, I do not believe in embarrassing any manufacturer. We, as officials, must stop and think that we are put in a position not to harass any manufacturer or any people, but to help them in the output of their particular devices.

Therefore, I say, Mr. Chairman and members of this convention, that, representing the great Commonwealth of Massachusetts, and also as the honorary president of the Massachusetts Sealers of Weights and Measures Association, elected at the conference which was held in the city of Worcester in last January—I might add the largest conference that has ever been held in the United States of America, at which we had even a larger attendance than we have here—and voicing the sentiment of our great Commonwealth, I strongly oppose this bill being laid over until next year.

The CHAIRMAN. The question is called for. The motion is to refer this specific bill to a committee. All those in favor say "aye," contrary "no."

(The motion was defeated.)

Mr. FARRELL. I move you that a roll call be had on the vote and a count made.

The CHAIRMAN. All those in favor of voting for the resolution so designate by standing. [After a rising vote.] The motion is defeated.

Mr. GOODWIN. Mr. Chairman, if it is now in order, I move you, sir, that this conference go on record as indorsing the provisions of this bill.

(The motion was seconded.)

Mr. SWEENEY. Mr. Chairman, I want to go on record as being opposed to this bill, because I believe that back of this whole proposition is a purpose of getting the whole weights and measures business of the United States under Federal control. I am not opposed to uniform scales or measurements, but I am opposed to the State, county, and city officials of all the States being subordinate to Federal officers, and that is just what this means. This bill may not mean that, but read the other bill that was read yesterday and see where you are.

I took this same position one year ago, and I do not see any reason why I should change my mind now. So far as Pennsylvania is concerned, we took no action on this bill in conference last year, because we did not have a copy of it and were unable to decide what course to pursue. That is my reason for voting against this bill.

The CHAIRMAN. Gentlemen, I want you to feel at perfect liberty to discuss this and to talk on this principle of Federal control. This is not something that is being fostered by the Bureau of Standards. We approve of this, but we want to know your opinion. The bureau did not initiate this principle; it has come from the outside; it has arisen in a great many places, and we are not sensitive about the matter at all, and you can discuss this as openly and as freely as you like.

Mr. SWEENEY. My remarks were not intended to apply to the Bureau of Standards, because I have absolute confidence in the director of that bureau. It is the principle involved, giving the Federal Government control throughout the different States.

Mr. STARN. As I see this bill that is before the conference, it appeals to me for the reason that it treats all men alike from ocean to ocean. The men of New York State are not set apart and designated as one particular people, or Pennsylvania as another, or New Jersey as a third. I can see no reason why any scale manufacturer should object to this bill—why their scales should not be sold under the same conditions on the Atlantic coast as on the Pacific coast. It would be up to them to explain. If they can manufacture their scales and send the same ones to California as they send to the other parts of our United States, there is but the one type for them to use, which is economical. Why 16 ounces should not make a pound in California the same as it does in New York I fail to see, and in order to get to that condition why should there be more than one type? The time has come for us to approve or to disapprove this bill, and it is a matter of our intelligence altogether. I call for the question.

Mr. UMPLEBY. The remarks of the gentleman from Pennsylvania are ill-timed, inasmuch as this bill can not put the control of the weights and measures under the Federal Government, because it is already there. It would take a revision of the Federal Constitution to take away from them the right to control weights and measures. Another thing: I am speaking as one who adjusts weighing and measuring devices, and I know on many occasions where I have condemned scales men have said, "Well, what kind of scale am I going to get? What is a standard scale?" There should be a standard for scales and standard for measures and they should be the same in all States. I believe we can take action on this bill and that the committee in Congress is perfectly capable of making any changes in it that will be necessary, and if we disapprove the bill at this time it will simply mean holding it over for another year, and probably indefinitely. I think we need action and as quickly as we can get it. I am speaking as one who does work in the field, and the people want to know where they are.

Mr. FARRELL. The sealers generally may not be familiar with the law. I am not a legal authority, but I have practiced law for some years and have been mixed up in some rather universal litigation and have had forced upon me a few of the millions of constitutional questions that are arising from day to day, caused, as some of us say, by the inexperience of our forefathers who drew and framed our Constitution. Under the law as proposed by Mr. Ashbrook, the work of the sealer as such, is taken absolutely out of his hands. The work of the man in the field is absolutely under the direction and control of the department at Washington. He is wiped out, his individuality is wiped out, the State departments are wiped out, and the work

itself is done under the regulation and under the control and rules of the National Government.. That is the provision of the bill.

Whether or not Congress has power to pass such legislation is too deep and too far-reaching a question for us to go into at this time, we have not time to consider it. I will not call attention to any part of the constitutional question, but will again call the attention of the sealers to the fact that the provisions of this bill are unalterable, they absolutely control the work of the man in the field, and he is absolutely under the regulation and control as set set up by the department of the National Government.

Mr. SHERMAN. Mr. Chairman, the gentleman who just spoke arises and states that he is not an authority on constitutional law nor a legal authority; then he goes on and puts on this bill an interpretation entirely at variance with the interpretation set by the counsel for the bureau, and by counsel appointed or elected in many jurisdictions who are appointed for the reason that they are authorities on constitutional law.

Mr. REICHMANN. I regret these personalities. Any lawyer has a right to an opinion until the Supreme Court of the United States decides on a matter of constitutionality. I see Commissioner Hartigan, of New York City, has come in, and I suggest that we have a word from him.

The CHAIRMAN. Does Mr. Hartigan want to be heard?

Mr. HARTIGAN. I have not any idea what the question is.

The CHAIRMAN. The question is on the action on the Ashbrook bill. It is really as to whether we approve or disapprove of the bill. The motion is to approve this specific bill, but I take it we are all broad enough to take it that what we are discussing is the principle.

Mr. HARTIGAN. I would not attempt at this time to take up any of the time of the conference by going into a lengthy dissertation on the provisions of the bill, but I think it interferes with the weights and measures provisions throughout the country, for once you open the door to national legislation bearing the character of paternalism, going back into the imperial power carried out now by the German Government, we are going to extend the forces and influences of a measure of this character into a large existence on the part of the Federal Government and to take away and deprive local sealers in counties, cities, and States of privileges which they now enjoy under the authority of their local government. It means to me that the National Government is going to extend its power into fields of individual localities; it is going to remove the immediate and intimate protecton enjoyed by the consumers of this country through the powers of the local sealers of weights and measures.

Mr. DOWNING. As I understand this bill, it is just giving the Federal Government power to pass on types, and that it can in no way be construed to take away the powers of the local sealers of testing the various weighing and measuring appliances under their jurisdictions. Section 9, if you will read it, clearly brings this matter up in the words: "*Provided, however*, That the approval of a type of weighing or measuring device shall not be construed as in any way interfering with the testing of individual weighing or measuring devices as provided by the laws of the several States, Territories, or the District of Columbia." That answers the question.

Mr. HARTIGAN. If this is a matter of debate, and we are to interpret the various provisions of this bill as attempted to be interpreted by the previous speaker, then I suggest, in all fairness to this conference, that the matter be laid on the table.

The CHAIRMAN. That has been voted on.

Mr. HARTIGAN. I beg pardon. I was not here when that was done. If that is in answer to my accusation that the bureau is about to have a door opened by the Federal Government for the further extension of its powers, then I am free to confess that I am without an answer to your suggestion. Whether or not the bill itself is limited so far as its powers are concerned, I still hold and maintain that it opens the door still wider for the National Government to extend its powers over States, over counties, and over cities in this country.

Mr. EGAN. Mr. Chairman, I believe that under section 7 the local sealers of weights and measures, with regard to the enforcement of the law, would be obliged to go to the United States district attorney for prosecution for violations; that it substantially takes the enforcement of the law regarding weights and measures out of the jurisdiction of the local or State courts.

The CHAIRMAN. Just on types.

Mr. VAN DUYN. I would like to amend the motion to the effect that the Chair appoint a committee of five, of which the Director of the Bureau of Standards be chairman, to draft a bill to regulate and control the manufacture, sale, and use of weights and measures, the same to be presented to the first session of the Sixty-fourth Congress.

The CHAIRMAN. That is different from the previous motion, in that it gives to the committee some power.

Mr. REICHMANN. I second that motion.

Mr. VAN DUYN. Speaking one word to the amendment, it does seem to me, gentlemen, if we have any one man among us who is qualified to draft or assist in drafting a bill that will be fair to one and all, State, county, and city sealers alike, the director of this bureau is that one man, and I do think that with a committee of five to draft such a bill, to be presented by some Member of Congress, we can arrive at a conclusion which we can all work from. For that reason I make this amendment, and I believe that it is one that will merit your fair consideration.

The CHAIRMAN. You have heard the amendment, which has been seconded, and the explanation. If there are no remarks, I will put the motion. Those in favor of the amendment will say aye; contrary, no. There seems to be a division. Those in favor will rise and remain standing until they are counted. [After a pause.] Those opposed will rise and remain standing until they are counted.

(The amendment was rejected.)

The CHAIRMAN. The original motion is now before the house, the amendment having been lost.

Mr. HARTIGAN. I rise to a question of privilege.

The CHAIRMAN. State your question.

Mr. HARTIGAN. The question is whether or not this proposed measure has been submitted to the Attorney General of the United States for his opinion as to whether or not it is constitutional?

The CHAIRMAN. Yes, sir; and also to the Solicitor for the Department of Commerce. They both are of the opinion that it is constitutional.

Mr. GOODWIN. The original motion was that it is the sense of this conference that we go on record as favoring the provisions of this bill.

The CHAIRMAN. Yes. Those in favor say aye; contrary, no. There seems to be a division. Those in favor will please rise and remain standing until they are counted. [After a pause.] Those opposed will rise and remain standing until they are counted.

(The motion was agreed to.)

I want to say in this connection that we very much appreciate the broad and liberal discussion that has been had here, and I feel quite sure when this matter goes to the committee ample provision will be given both sides to discuss it freely. I think the disposition of the Coinage, Weights, and Measures Committee is to give absolute freedom to discussion. If I were not in charge of the Bureau of Standards and not in favor of more centralized work, I should speak more emphatically at this point. I think, however, my own tendencies and the tendencies of the bureau are toward the local management of things just so far as possible, and we have felt that the principle involved was only that it would prevent dishonest and bad types being placed upon the market.

During my last visit to the international conference of weights and measures I saw the model law drawn up for the Chinese Government by the international conference on weights and measures, and I believe it is the best law in existence to-day. You would be surprised at the provisions of that bill, which was drawn by the best men on weights and measures in the various countries, and they have given to the central Government authority there which they never would in this country, and at that one particular thing I was very much surprised. One thing they have absolutely prevented is the manufacture of a type that was not approved.

The next paper on the program is No. 15, "System of keeping records," by Mr. Sharp, of Philadelphia.

SYSTEM OF KEEPING RECORDS, BY BENJ. M. SHARP, CHIEF CLERK, COUNTY COMMISSIONERS' BUREAU OF WEIGHTS AND MEASURES, PHILADELPHIA, PA.

Philadelphia is represented in the weights-and-measures field by one of the largest bureaus in the East. It is under the direct supervision of the county commissioners, who are the appointing power. The Philadelphia bureau was organized January, 1914, by the appointment of a supervisor, a chief clerk, a stenographer-clerk, 35 inspectors, and two laborers. Offices and testing rooms were equipped with every standard necessary for proper operation in a large city. The city was divided into districts, and into each district are detailed two inspectors. The inspectors work in pairs, being designated as crews A to M, inclusive. The districts are likewise lettered. Each crew of two inspectors is equipped with a horse, wagon, harness, and other necessary transportation equipment, and each wagon contains a complete working outfit for every class of

weights-and-measures work in the field. In addition to the 12 wagons, the bureau has a 2-ton motor truck, equipped for testing wagon and other large scales. Two men and a laborer are detailed on this work. We also have a smaller and lighter truck, with two inspectors detailed thereon, which is used for the inspection of gasoline pumps, measures, and other important work in this class.

Philadelphia City and Philadelphia County are consolidated and the area to be covered is 130 square miles, containing a population of 1,750,000 people.

It became important, therefore, to devise a systematic method of keeping the records of every act of every inspector. So the system now is use was adopted.

A study of all the laws brought us to the conclusion that the subject of weights and measures was divided into five main divisions:

1. Standards and denominations.
2. The manner of sale of various commodities or classes of commodities.
3. The penalty for acts intended to defraud purchasers, whether through shortage, substitution, or misrepresentation.
4. The manner of inspection by administrative officials; and
5. The marking of the net contents of containers in terms of weight, measure, or numerical count.

After a year and a half of the hardest kind of a campaign for honest weights and measures, during which we had covered every angle of the work, I believe the system adopted to be one of the most comprehensive, yet simple in its operation, in use anywhere. During our first year and a half we have made 750,000 inspections of scales, weights, and measures, not including commodities, coal, hay, etc.

You may make observations, you may make inspections, you may make condemnations, confiscations, and investigations, but if you do not record the information, your work is of little value for it is not possible to carry all the weights-and-measures problems in your head.

The following is a brief explanation of the main forms used by the bureau:

No. 1. The certificate.—These are in triplicate, numbered in triplicate, and each sheet of a different color. The pink one, after being filled in with the number and kind of inspections, is delivered by the inspectors to the merchant. On the back of the pink certificate is an extract of the laws under which we operate. The white certificate (duplicate) remains in the book as the inspector's individual record of inspection, and the buff (cardboard) certificate is returned to the office as the official record. These latter are filed in alphabetical order and become a permanent record of all instruments inspected in the store of that particular merchant. Upon every reinspection of apparatus a certificate is issued. These triplicate certificates are bound in book form, 50 sets (in triplicate) to each book.

No. 2. The record of penal violation.—In duplicate, in book form, numbered in duplicate, 50 sets to a book. The white one remains in the book for the inspector's individual record, and the pink one (cardboard) is filed in the office and becomes the official office record of violation against the merchant. These forms are only filled up by the inspectors when apparatus is confiscated or there is a violation

of the laws. The form permits of a record of the case until it reaches the highest court.

No. 3. Condemnation tag.—Is made of linen (so that it can not be torn by the merchant or by children while the scale is condemned). This tag has a stub, numbered in duplicate, and perforated so it can be torn off and returned with the certificate of condemnation, in order that the inspector or the office might check up at the end of the 10 days whether or not the apparatus has been repaired as required by the regulations. The larger portion of the tag is sealed, with a lead seal, upon the instrument condemned. There is a fine of $25 for using the instrument while the tag is attached. In Philadelphia we require the scale repair man who repairs the instrument to first take out a permit (see 3–B), which is free, for its repair or adjustment, and after he has repaired or adjusted same he must fill in and report to this bureau the blanks on the reverse side of the permit. This is done to check up the repair man and hold him responsible while the tag is off the scale and the instrument in process of being repaired. The repair man must reseal this tag upon the instrument repaired and return it to the owner. The owner must then notify this bureau in writing (upon postal cards left at the time of the condemnation) that the instrument has been repaired and that it is ready for reinspection. Inspectors are immediately sent to retest with standards and, if the apparatus is correct, to remove the condemnation tag and issue a reinspection certificate, returning the condemnation tag with the triplicate certificate to the office, where the original condemnation is recorded against that merchant. Notation is made on this record that scale is reinspected and sealed or recondemned or confiscated, as the case may be. This is what we call a reinspection of a condemnation. On the back of the condemnation tag is an extract of the laws and the word "condemned."

No. 4. Postal card, self-addressed, which is left with the merchant when scale or other instruments are condemned.—When they are repaired he fills in his name and address and the date, and we have a written request that his instrument is ready for reinspection.

No. 5. Confiscation tags and stickers.—These are used to place upon such apparatus as are confiscated. When a confiscation is made, the inspector fills out and files against the merchant a violation (which is numbered). He then carries this number to the confiscation tag, as follows: V1246, John Jones, 225 Market Street, Philadelphia, Pa., the date, the inspectors' names, and the kind of apparatus confiscated. If prosecution is to be instituted against the merchant, or if, for any reason, the inspector desires to again get the instrument as evidence, it is a simple matter to turn to the record against John Jones and send an order to the warehouse for violation No. 1246.

No. 6. Condemnation stickers.—These are used to stick upon the instruments as an additional warning to customers not to buy over condemned apparatus. Ofttimes the condemnation tags are so placed upon the instruments that the customer can not see them. Unscrupulous dealers will use the scale. But with the stickers pasted on the instrument that act is reduced to a minimum and the merchant is the most anxious to get it off the counter and into the repair man's hands.

No. 7. Approval seals.—This seal was specially designed for use in Philadelphia, but could be utilized by cities, counties, or States where they are divided into districts. This seal contains the day, the month, the year, the crew letters, etc. Before applying to the instrument, the inspectors making the test and using a conductor punch, punches out the day, year, and month, and also his crew letter. These approval seals are a different color each year. It is very easy to check up the inspector or the merchant by alternating the color scheme. In addition to this paper seal, the lead seal is likewise attached, bearing the year and the crew letter.

No. 8. Not legal for use in trade.—Very often there are scales, especially family scales, over which commodities are not bought or sold, but which the owners desire tested as to accuracy. This seal is intended for this use. But a record is kept of these scales, and periodically the inspectors are given a list of those thus sealed to investigate if they are being used for the sale of commodities. If so, prosecution is instituted.

No. 9. Coal reweighing record.—This form is in duplicate, the original being blue and the duplicate white. The duplicate remains in the book for the inspectors' record. They are numbered in duplicate. Coal wagons are stopped upon the streets as the coal is being delivered to the purchaser. The driver is obliged to have a delivery ticket showing the net weight of the coal in the load. Copy of this ticket is reduced to the record card, and then the two inspectors require the driver to drive his team to the nearest sealed scales, where the gross weight of the load is taken and recorded on the certificate; then one inspector remains at the scales upon which the reweighing is made while the other inspector follows the load of coal to its destination to see that it is delivered; then he requires the driver to drive back to the same scales, and then and there the tare of the wagon, buckets, shovels, blankets, etc., is taken, which deducted from the gross gives the net weight of the coal delivered. If a shortage is found, a violation is filed against the coal dealer, and he is warned by letter that a repetition will result in his prosecution for short weight. And a repetition results in his prosecution and a fine of $25 and costs; second offense, $50; third, $100. This method of inspection and keeping record of same has had the effect of reducing the coal shortage to a minimum. The average ton of coal in Philadelphia a year ago was 1,800 pounds; the average to-day is 2,240 pounds, or as near to that as conditions will permit. As wagon scales are inspected and tested they are given a number, and there is attached to each scale an aluminum disk (see 9 B) about the size of a half dollar. This disk bears the coat of arms of Philadelphia and upon the reverse side bears a serial number. This scale afterwards is known by number; and no matter how many times the business may change hands, we have a complete record of every test made upon that particular scale. A map of the city is affixed to compoboard in the office, and as each wagon scale is numbered and reported into the office, small numbered tacks are used to stick into the location on the map of this particular scale, so that at any time any inspector in the field desires the use of a tested scale, in whatever neighborhood he may be operating, he may telephone the office, giving his location, and the nearest scale can be given to him, together

12

COUNTY COMMISSIONERS

BUREAU OF WEIGHTS AND MEASURES

DAILY REPORT FOR _____, 191__

NAME OF INSPECTOR	ASSIGNED TO	CHARACTER OF WORK	WHERE WORKED	NO. PLACES VISITED	NO. OF INSPECTIONS	NO. APPROVED	NO. CONDEMNED	NO. CONFISCATED	TIME FIRST INSPECTION	TIME LAST INSPECTION
	Team A-Truck									
	Team B									
	Team C									
	Team D									
	Team E									
	Team F									
	Team G									
	Team H									
	Team I									
	Team J									
	Team K									
	Team L									
	Team M									
	Team N									
	Team O									
	Automobile									
	Coal									
	Milk									
	Gasoline									
	Commodities									
			TOTAL							

NUMBER OF SCALES READY FOR RE-INSPECTION_____

NUMBER OF SCALES CONDEMNED AND NOT REPAIRED_____

INSPECTORS OFF DUTY_____ REASON_____

_____ REASON_____

_____ REASON_____

APPROVED: _____
SUPERVISOR

ATTEST: _____
CHIEF CLERK

TOTAL							
NUMBER			VIOLATIONS		PROSECUTIONS		
proved	Cond.	Cond.	Civil	Penal	Civil	Penal	

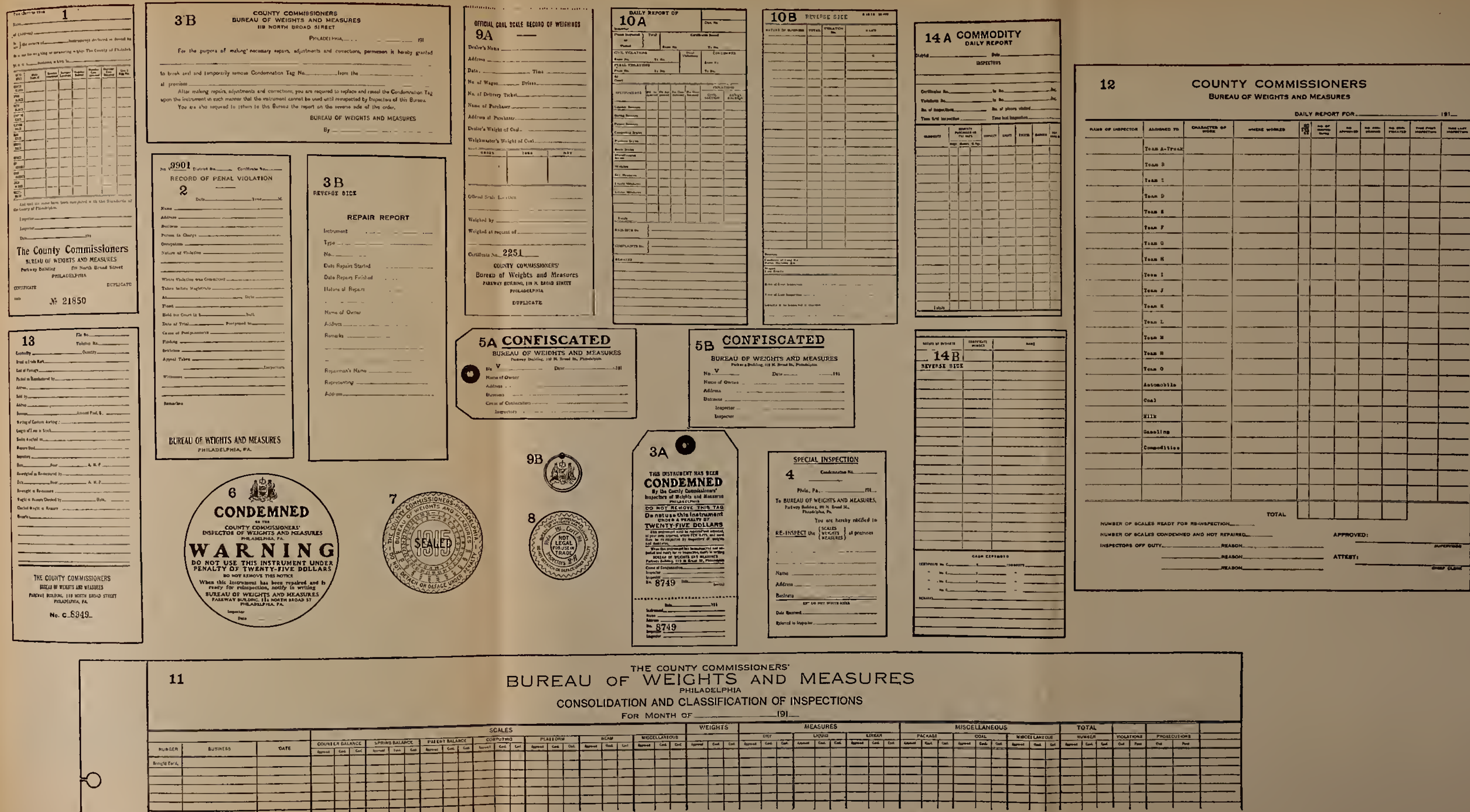

SET OF FORMS USED BY THE WEIGHTS AND MEASURES DEPARTMENT OF PHILADELPHIA, PA.

24309°—16. (To face page 174.)

with its date of approval, etc. During the next year this numbering on scales of all types will be installed.

No. 10. Daily report card.—This card is a consolidation of the daily work of the inspector. It shows the inspectors' names, date, district, number of places visited, certificates issued, violations filed, condemnations made, and the types of instruments and devices inspected, approved, condemned, confiscated; the number of requests received, complaints in the field, and any special remarks. On the reverse side (10–B) of the daily report there is consolidated by the inspector a classification of the business; that is, so many bakers, so many grocers, so many meat markets, etc., with their names opposite their business. This is intended to consolidate the entire day's work and to classify the kind of business visited, and it reports the daily condition of field and other equipment and just where the inspector is working to-day and where he expects to work the following day. At the end of the month all these daily reports are consolidated into a monthly report. (See No. 11 for monthly report.)

No. 11. Monthly report, consolidated.—The headings on this consolidated monthly report correspond with those of the daily reports. Under headings of "Date" on the monthly report there is consolidated the daily reports of the first day of the month (this can be done daily). Then under heading "Total," on the right, there is totaled the number of approvals, condemnations, and confiscations, the number of violations filed, the number of places visted, and the number of prosecutions. This can be done daily from the daily reports of the inspectors, so that at the end of the month all that is necessary is to consolidate the last day's reports and total the same. This is a very simple form, but one that, if properly kept, will give every detail of every act of every inspector. Below the red line in the center of the sheet, and to the left, under the heading "Business," you consolidate, at the end of the month, the classification of business. You get this classification from the back of the daily reports of the inspectors. At the end of the year you will know how many inspections were made; how many of each type of apparatus were either approved, condemned, or confiscated; how many packages were reweighed, how many loads of coal; how many places visited; how many violations filed; the number of prosecutions instituted; the number of grocers inspected; and the number of every other classification of business, etc. At the end of the year there are only six sheets to handle, for the reason that this monthly report blank is printed and ruled on both sides, each side for one month. From these six sheets it is very easy to work out statistics and other data.

No. 12. Consolidation of daily work.—This form is special. We are detached from our county commissioners' offices and this form is used to keep the county commissioners advised each day what inspectors are working, where they are working, character of their work, number of places visited, number of inspections, condemnations, confiscations, approvals, and the time of each first inspection and that of the last. It also reports the number of pieces of apparatus condemned and not yet repaired, and a daily record of the number of pieces of apparatus repaired and ready for reinspection on that day. This is a complete check on all inspectors, and the appointing power knows where the men are at all times. This report must be verified

by the supervisor and the chief clerk, who must sign it before it is sent to the county commissioners.

No. 13. Commodity certificates.—In duplicate (green and white), numbered in duplicate. In books, 50 sets to each book. Green one is the official record, which the inspector returns to the office, while the white one remains in his book for his own record. This form can be used to "try out" any commodity as to weight, measure, marking of net contents, or for direct purchases when prosecution is contemplated, or for general information as to how commodities are running in any section of the city. If these reports show the commodity is being sold short, and it is the first offense on our records, then a violation is filed against the seller, and he is notified by a form letter that a repetition will result in his prosecution. This merchant is watched, and if a second violation is filed against him he is prosecuted, but first the commodity running short is purchased, or a sample thereof, which is brought into the office and the head tester again checks to the weight markings, etc., in order to verify the field inspector's weight and report. We then have the evidence of the two field inspectors and the head tester and likewise the sample commodity, and have very little trouble in securing convictions.

No. 14A and 14B, commodity daily report cards—Color scheme—. The various blanks and reports used are of a different color. This is most important from the fact that the office is the clearing house of every act of every inspector and when the various forms come back from 35 inspectors it is a very simple matter for the clerks in the office to separate according to color, which brings every report together in its proper class.

I shall not burden you further with details of other forms used, but I desire to say that the system of keeping records in Philadelphia is simplified to such an extent that two clerks have been able to handle all the reports, etc., upon three-quarters of a million inspections during the past year and a half.

If there are any forms that we use in Philadelphia which will help to bring about uniformity in our work, we shall be pleased to furnish them to anyone who might request them.

THE STANDARD BARREL LAW, BY F. S. HOLBROOK, BUREAU OF STANDARDS.

The Tuttle-Weeks standard-barrel law (Public, No. 307, Sixty-third Cong.), entitled "An act to fix the standard barrel for fruits, vegetables, and other dry commodities," is an important act which deserves the most careful attention of every weights and measures official. It is a most noteworthy advance in legislation, since it is the first mandatory standard for general use ever established by Congress under the power given in the Constitution "to fix the standard of weights and measures." It should be understood by every weights and measures official, since by its terms "prosecutions for offenses may be begun upon complaint of local sealers of weights and measures or other officers of the several States and Territories appointed to enforce the laws of the said States and Territories, respectively, relating to weights and measures." Its provisions are, then, worthy of painstaking study, and it is my privilege to bring some of its main features to your attention at this time.

It is first advisable to fix firmly in mind the two meanings of the word barrel, since this is the sole container to which the law refers. The word is applied, first, to a container of a certain kind, and, second, to the capacity of such container or the amount which it will hold. The Standard Dictionary gives typical definitions in the following words:

Barrel. 1. An approximately cylindrical vessel, usually slightly bulging in the middle, generally made of wooden staves held together by hoops. * * * 2. As much as a barrel will hold; a measure of quantity applied both to liquids and to solids. * * *

The word, as used herein, will be employed within the meaning of these definitions.

In 1912 Congress passed a law popularly known as the Sulzer apple-barrel act (Public, No. 252, Sixty-second Congress) entitled "An act to establish a standard barrel and standard grades for apples when packed in barrels, and for other purposes," and the provisions of this are well known to the officials throughout the country. An impression seems to have gained some currency that the provisions of the Tuttle Act are similar to those of the Sulzer Act, but that it includes in its provisions not only apples but other fruits, as well as vegetables and other dry commodities. Such an impression, however, is an erroneous one. There are a number of extremely important distinctions between them, and these points of distinction should be firmly fixed in mind.

First. The former law (i. e., the Sulzer Act) is based on the interstate commerce section of the Constitution, depends for its validity on this section, and in general covers only those shipments which enter into interstate commerce; the latter law (i. e., the Tuttle Act) is based on the weights and measures section of the Constitution, depends for its validity on this section, and covers interstate shipments and also sales of every kind whether they be interstate or intrastate in character.

Second. The former law establishes a permissive standard which becomes operative over a barrel only when a certain affirmative act is done, i. e., branding the barrel with the words "Standard grade minimum size * * * inches"; the latter law establishes a mandatory standard which must be complied with unless the commodities are sold exclusively by weight or numerical count.

Third. The former law did not repeal State laws except in so far as they were nullified on account of the fact that the State laws might not be so enforced as to interfere with interstate commerce; the latter law automatically nullifies all State laws in so far as they differ from or are inconsistent with the provisions of the national law.

Fourth. The former lay refers only to barrels containing apples; the latter law refers to barrels which are used in the sale of any fruits, vegetables, or other dry commodities, unless sold exclusively by weight or numerical count.

Fifth. The violation of the former law is usually considered a civil offense and entails a penalty of $1 and costs for each barrel misbranded within the meaning of the act, recoverable in a civil suit; the violation of the latter law is a criminal offense, to wit, a misde-

meanor, and is punishable by a fine not to exceed $500 or imprisonment not to exceed six months.

The following distinctions are less important, but are mentioned to complete the matter:

Sixth. The former law specifies a barrel of certain given dimensions and admits in terms of only one variation from these dimensions, namely, when the barrels used are made of steel and have the interior dimensions provided for in the section. On the contrary, the Tuttle law, while specifying the same dimensions as the Sulzer law, allows also any barrel of other dimensions which contains 7,056 cubic inches. This distinction appears unimportant, however, since it is probable that most of the standard barrels will be of the dimensions specified.

Seventh. There is no provision for establishing tolerances in the Sulzer law, while in the Tuttle law it is provided that tolerances shall be established by rules and regulations made by the Bureau of Standards. When these are established they will undoubtedly govern the administration of the Sulzer bill also as defining what shall be construed as a substantial variance from the barrel established by this law.

As before stated, there are now two barrel laws upon the Federal statute books. The question may well arise in the minds of some, "Does the later statute, the Tuttle barrel law, repeal the earlier statute, the Sulzer apple-barrel law?"

The rule of law in cases where there is no clause expressly repealing the provisions of former statutes is that such statutes or parts of statutes which are inconsistent with the later statute become inoperative and are repealed; but that such statutes or parts of statutes which are not inconsistent with the later statute and which can be enforced at the same time as the later statute, continue in full force and effect.

Let us briefly examine these two laws to see under which class they fall.

The barrels mentioned by the two acts are exactly the same in size, therefore they are not inconsistent in this particular.

The Sulzer law is not violated unless an affirmative act is done; i. e., unless the barrel is branded in a certain way and is then shipped in interstate or foreign commerce or sold or offered for sale within the District of Columbia or the Territories of the United States. If a barrel containing apples is not brought within the provisions of the Sulzer Act the Tuttle barrel law will seize hold of it and require compliance with its provisions. Therefore it may be said that when the barrel is not within the provisions of the Sulzer law, the Tuttle law will operate against it without any conflict.

It remains to be considered whether both laws can work simultaneously; whether a barrel of apples, which comes within the provisions of the Sulzer law, can be operated upon simultaneously and without conflict by the Tuttle law, which, of course, retains its jurisdiction over it. We believe there is no reason why this double jurisdiction can not be assumed.

The Sulzer law may be violated in four ways by a barrel of apples which has been brought within its purview.

(*a*) The apples contained therein may be below the grade claimed by the brand.

(*b*) The barrel may fail to bear a statement of the name of the variety, the name of the locality where grown, and the name of the packer or the person by whose authority the apples were packed and the barrel marked.

(*c*) The barrel may be of other than the standard size required by law.

(*d*) Two or more of the above violations may exist simultaneously.

The violations (*a*) and (*b*) are violations of the Sulzer law alone and are to be proceeded against wholly under the provisions of this law.

The violation (*c*) is equally a violation of both laws, and as such may be proceeded against under the provisions of either law.

The violation (*d*) consists of two or more distinct violations, and these two violations may be proceeded against in the same ways that are described above.

That the failure to comply with the grading feature is an offense distinct from the failure to comply with the standard size established is, we believe, sufficiently evident from the fact that such violations are mentioned in separate sections of the Sulzer bill, the first being defined in section 5, the latter in section 4.

Therefore there appears to be no inconsistency in the two laws in this particular.

There appears to be one provision of the Sulzer law which is partially inconsistent with the provisions of the Tuttle law and therefore, following the general rule given above, this particular provision of the Sulzer law is partially repealed by implication and becomes of no effect. This provision occurs in section 4 of the Sulzer law and consists of the italicized part of the section as quoted below:

SEC. 4. That all barrels packed with apples shall be deemed to be below standard if the barrel bears any statement, design, or device indicating that the barrel is a standard barrel of apples, as herein defined, and the capacity of the barrel is less than the capacity prescribed by section one of this act, *unless the barrel shall be plainly marked on end and side with words or figures showing the fractional relation which the actual capacity of the barrel bears to the capacity prescribed by section one of this act.* The marking required by this paragraph shall be in block letters of size not less than seventy-two point one-inch gothic.

It appears that the Tuttle law makes no provisions for any fractional values except those specifically included—that is, the third, the half, and the three-quarters barrel. It seems, therefore, that the subdivisions as mentioned in the Sulzer Act are limited by the provisions of the Tuttle Act, which takes precedence over it, to the three fractional sizes mentioned. The marking of some other fractional part would be in violation of the Tuttle law and could be proceeded against under that law.

We come to the conclusion, therefore, that except for the single case of fractional subdivisions of the barrel the Sulzer Act and the Tuttle Act are entirely in harmony and that both are valid and can be enforced simultaneously.

Another question which has arisen is as follows: "Does the Tuttle law repeal the marking requirement of the net-weight amendment of the pure-food law in so far as barrels are concerned?"

The text of the law containing this amendment is as follows:

That for the purposes of this act an article shall also be deemed to be misbranded: * * *

In the case of food: * * *

Third. If in package form, the quantity of the contents be not plainly and conspicuously marked on the outside of the package in terms of weight, measure, or numerical count: *Provided, however,* etc. * * *

It will be seen from the above that all foods which are "in package form" within the meaning of this act must be marked with the quantity of their contents. This marking, of course, is required only on goods shipped in interstate or foreign commerce or sold or offered for sale in the District of Columbia or the Territories of the United States. There are no exceptions to the marking provision, as stated, on packages of this size. Barrels containing food have been construed as being "in package form" within the meaning of this act. The above question may now be put in the following form: "Does the fixing of the standard barrel and subdivisions impliedly repeal the compulsory marking requirement on packages such as standard barrels and subdivisions containing food when they are shipped in interstate commerce?"

We believe that the question must be answered in the negative.

The Tuttle law establishes a mandatory standard barrel and subdivisions and does not require any marking, nor does it state in terms that no marking provisions should apply. The term "barrel" for fruits, vegetables, and other dry commodities is now a unit of measure and refers to a certain definite capacity.

The pure-food law does not create any standards, nor does it exempt any package because it is put up in a customary standard size. The pound is a customary unit of weight, yet a package of butter, coffee, or other food must still be marked, although it contains just a standard pound. The liquid quart is a customary unit of liquid measure, yet a package containing food in liquid form must still be marked, although it contains just a liquid quart. The bushel is a customary unit of capacity, yet a package of fruits or vegetables must still be marked, although it contains just a standard bushel. By analogy a barrel for certain purposes becomes a standard unit of capacity, yet it does not by that appear that it is taken out of the general rule. Therefore it seems that such a package must still be marked with the quantity of the contents. It is true however that the later law has resulted in changing the required marking. Whereas the former legal marking on a barrel of the size of the standard barrel established would have been "3 bushels $1\frac{1}{5}$ pecks," it may now be "One barrel." And the fractional parts may be marked "Three-fourths barrel," "One-half barrel," and "One-third barrel" instead of in terms of bushels and pecks. But we can not conclude that the marking required by the net-weight amendment has been rendered unnecessary by the Tuttle law.

The scope of the act can not be perfectly understood until the proviso at the end of section 3 is thoroughly in mind, since this limits the application of the act.

This proviso reads as follows:

Provided, however, That nothing in this act shall apply to barrels used in packing or shipping commodities sold exclusively by weight or numerical count.

This means that in these cases barrels of any size may be used.

It does not mean, however, that to certain commodities the act sometimes applies and sometimes does not apply, i. e., that if an individual sale is made by weight or numerical count, the law does not apply to that sale and does apply in other sales not so made. This construction is clearly contrary to the meaning of the word "exclusively." We believe that the meaning is that if by the long and general custom of trade a commodity has always been bought and sold by weight and the capacity of the barrel has not been used to determine the quantity of the contents purchased or delivered, then in the future such commodities shall continue to be bought and sold in this way.

To determine whether any stated commodity may be sold by the standard barrel, without more, the custom of trade in reference to this particular commodity must be examined and the question decided upon the unanimity of the former method of sale.

The most common dry commodities which come to mind as having been universally sold by weight when in barrels are flour and sugar. This method of sale has always been employed in both wholesale and retail transactions involving these commodities. Further, the great majority of the States have standardized the weight of the barrel of flour at 196 pounds net. The above rule, then, at once eliminates flour and sugar from the provisions of this act.

The following commodities are some of those which we believe are in the same category: Crackers, etc., starch, corn meal, nails, oysters in the shell, cement, coal, charcoal, shoe pegs, etc.

In relation to the above commodities, it is probable that the Tuttle law does not apply. All these commodities in barrels or subdivisions must be sold by weight. Also State laws requiring a specified weight or the branding of the package with the weight remain in full force and effect in respect to the above commodities.

It may be especially emphasized at this point, and it should be kept in mind throughout in order to preclude any possible misunderstanding, that the statements made in this paper are solely my personal opinions, that no official signification whatever can be attributed to them, and that they may not be considered as a forerunner of or as throwing light upon the rules and regulations which will hereafter be made by the Director of the Bureau of Standards, according to the authority given by section 3 of the act.

It is important to determine of what a violation of the law consists. This is expressed by section 2 in the following words:

SEC. 2. That it shall be unlawful to sell, offer, or expose for sale in any State, Territory, or the District of Columbia, or to ship from any State, Territory, or the District of Columbia, or to a foreign country, a barrel containing fruits or vegetables or any other dry commodity of less capacity than the standard barrels defined in the first section of this act, or subdivisions thereof known as the third, half, and three-quarters barrel, and any person guilty of a wilful violation of any of the provisions of this act shall be deemed guilty of a misdemeanor and be liable to a fine not to exceed $500, or imprisonment not to exceed six months, in the court of the United States having jurisdiction: *Provided, however*, That no barrel shall be deemed below standard within the meaning of this act when shipped to any foreign country and constructed according to the specifications or directions of the foreign purchaser if not constructed in conflict with the laws of the foreign country to which the same is intended to be shipped.

The violation then consists in the sale, or the offering, or exposing for sale anywhere, or in the shipping from one State to another or

to a foreign country of a barrel or subdivision that is less than standard size as specified by the law. It is unnecessary to make the shipment from one part of a State to another part of the same State unlawful since this shipment will usually include a sale within that State and thus the transaction otherwise come within the prohibition.

The violation of the act must be a "wilful" one, or the penalty does not apply. This word was added in the final debate before the bill was passed by the House of Representatives, and it considerably weakens the force of the law by providing a shield behind which an offender can take refuge if accused. We do not intend to state that any violation not resulting from fraud or from criminal negligence should be proceeded against in any case, but the inclusion of the word furnishes a loophole by which even guilty offenders can avoid the legal consequences of their acts.

The meaning of the word "wilful" in a statute has been judicially interpreted a very great number of times, and we have, therefore, a large number of definitions and explanations of the word differing slightly from one another. Several of these will be given here to aid the reader in determining the legal force and effect of the word as interpreted by the courts.

To do an act forbidden by law without reasonable belief that it is lawful, is to do the act "wilfully."

The phrase "wilful violation of law" means a violation thereof knowingly and deliberately committed. (Catlett *v.* Young, 32 N. E., 447.)

A person who deliberately does an act which he knows to be unlawful or wrongful, is generally held to have done it wilfully. * * *

To authorize a conviction under a penal statute prescribing a punishment for wilfully removing an official seal from property which has been sealed up by officers of the customs, it must appear that the defendant not only intended to remove the seal, but that he had at the time a knowledge of its character. One who removes such a seal in ignorance of its character, and in the honest execution of a supposed duty in the care and transportation of the property, is not liable to the punishment under the statute, for the reason he can not be deemed to have acted wilfully. (U. S. *v.* Three Railroad Cars. (U. S.) 28 Fed. Cas. 144, 146.)

In proving a crime at law the prosecutor must prove every element of the crime before the defendant is put on his defense, for before every element is proved the crime is not shown to have been committed. Here the willfulness of the violation is one of the elements of the crime. Therefore, in order to make out a good case one must be prepared to prove acts that constitute a violation of the provisions of the law, and further to prove that these acts were done with an intent to violate its provisions.

The defense in a large number of cases will undoubtedly be that the violation was not willful, on account of the fact that (a) the defendant did not know of or did not understand the law; (b) that he did not know that the particular barrels employed were below standard.

The first step should therefore be publicity for the law itself, especially publicity that will bring home in unmistakable manner the fact of knowledge in individual cases. This can be brought about by bringing the law to the notice of the shipper and seller individually by word of mouth or by letter. And memorandums of conversations and carbon copies of letters should be made and retained for use as evidence or to refresh the memory for verbal testimony as to the facts if prosecutions become necessary.

The proof of the knowledge that the particular barrels used were below standard is a still more difficult proposition. If it can be proved that the barrels were ordered to be short by one who would have no other use for barrels than to pack commodities mentioned in the law, and that they were then used to pack these commodities for sale or shipment, such proof would seem reasonably to establish the guilty intent. Such proof would probably be very difficult to obtain. If it can be proved that the shipper or seller had been personally warned that a certain lot of barrels were short and they were thereafter used in the shipment or sale of commodities to which the law applies, this would seem to be very strong evidence of the fact of guilty knowledge, and this kind of evidence will probably be most often used.

In order to assist manufacturers of and dealers in barrels, and packers, shippers, and dealers of dry commodities in barrels, and to determine whether or not violations exist and to prepare evidence in cases where prosecution is necessary, it is very evident that the official must be able to determine quickly and accurately whether any barrel is or is not a standard barrel as defined by law. In some cases this can be done by determining dimensions only, but in the majority of cases the actual cubical contents of the barrel must be calculated. We are concerned then with the method by which this is done.

The dimensions of the standard barrel for fruits, vegetables, and produce, when measured without distention of its parts, are specified as follows: Length of stave, 28½ inches; diameter of heads, 17⅛ inches; distance between heads, 26 inches; circumference of bulge, 64 inches, outside measurement; thickness of staves, not greater than $\frac{4}{10}$ inch.

The first of these dimensions is to be taken with a steel tape laid flat along the outside of the barrel from top to bottom.

The second is to be measured along the center board of those composing the head and should be the greatest length of this board at any point. It may also be measured on the barrel at the chime and should include the depth of the chime on each side. (The chime is the ring cut into the ends of the staves at top and bottom to receive the head.)

The distance between heads is to be measured vertically through the barrel from inside to inside of the chime ring, or from the inside of one of the heads to the inside of the chime ring on the other end.

The fourth of these dimensions is to be measured with a steel tape around the outside circumference of the barrel at the point of greatest bulge.

The fifth should be taken with a flat steel rule, divided into tenths of an inch, and at the point of greatest thickness of the staves or usually at the point of greatest bulge. In taking this measurement the rule can be thrust through one of the interstices of the barrel.

If, when found, all the dimensions are correct or if none are less than those specified, the barrel complies with the law.

If, when found, all of these dimensions are less than those required, the barrel is of less capacity than standard. The same may be said when none are too great and one or more considerably less than those given. But when one or more are somewhat greater and another or others somewhat less than those specified in the law, or when the barrel is palpably of a different shape than that specified, it is not

necessarily in violation of the law, on account of the proviso which follows the dimensions given above and which reads as follows:

Provided, That any barrel of a different form having a capacity of seven thousand and fifty-six cubic inches shall be a standard barrel.

In these cases the capacity of the barrel must be computed from the dimensions determined, and the result compared with the standard capacity, 7,056 cubic inches, to determine its accuracy.

The formula for computing the capacity of a barrel is:

$$\text{Capacity} = V = 0.7854L(D_H + 0.6d)^2.$$

Where L = distance between heads.
D_H = head diameter.
d = (Bulge diameter − Head diameter) = $(D_B - D_H)$.

From the measurements determined as above described, we already have the quantities L and D_H. We must determine d, which is stated as being equal to the bulge diameter—the head diameter. Therefore, the first determination must be the bulge diameter (D_B).

We already know the bulge circumference outside, and from this we find the outside bulge diameter by the use of the formula,

$$\text{diameter} = \frac{C}{3.1416}$$

where C=the circumference.

The diameter here determined is the diameter from outside to outside of staves, while D_B required is the inside diameter. Therefore, from the diameter thus determined subtract twice the thickness of the staves and the result is the inside bulge diameter (D_B). Now subtract from this quantity the head diameter (D_H), which is already known. The result is d, which was the only unknown quantity in the above equation. Having all the quantities, they should be substituted and the equation solved.

For illustration, we may solve the equation, using the dimensions given in the law for the standard barrel.

First. Find the outside bulge diameter from the formula,

$$\text{diameter} = \frac{C}{3.1416}$$

C=64 inches (given in law).
64÷3.1416=20.372.

Second. Find the inside bulge diameter (D_B) by subtracting from the above twice the thickness of the staves.

Thickness of stave=0.4 inch (given in law).
Twice thickness of stave=0.8 inch.
D_B=20.372−0.8=19.572.

Third. Find d, which equals (D_B), (determined above), minus D_H (17.125, given in law).

d=19.572−17.125=2.447.

We now know the value of all the quantities mentioned in the equation.

V=0.7854 L $(D_H+0.6\ d)^2$ as follows:
L=26 inches (given in law).
D_H=17.125 (given in law).
d=2.447 (determined above).

Fourth. Substitute these values in equation; we then have:

$V = 0.7854 \times 26\ [17.125 + (0.6 \times 2.447)]^2$.
$= 20.420 \times (17.125 + 1.468)^2$.
$= 20.420 \times (18.593)^2$.
$= 20.420 \times 345.7$.
$= 7059.2$ cubic inches.

The capacity as stated in the law differs from the capacity as determined from the dimensions given in the law by about 3 cubic inches on 7056 cubic inches, or 0.04 of 1 per cent.

In this way the capacity of any barrel of this form may be determined when the dimensions are known or can be determined.

As mentioned heretofore, prosecutions for offenses may be begun upon complaint of State and local officials enforcing weights and measures laws. This does not mean, however, that this is the only way that they can be inaugurated. This specific provision was included in order that this power might affirmatively appear in the act itself. The exact scope of the power was discussed by Mr. A. L. Thurman, Solicitor of the Department of Commerce, in a written opinion on this bill. We quote the question referred to Mr. Thurman and his answer, as follows:

> The opinion of this office has been requested as to whether * * * the provision that prosecutions for offenses may be begun upon complaint of local sealer of weights and measures or from offices of the States * * * * (will) prevent action being started by anyone else. * * *
>
> By section 771, Revised Statutes, Congress has provided that—
>
> "It shall be the duty of every district attorney to prosecute in his district all delinquents for crimes and offenses cognizable under the authority of the United States, and all civil actions in which the United States are concerned." * * *
>
> The authority conferred upon the local sealers of weights and measures, or other officers of the States, to institute proceedings under the proposed act is, in the absence of explicit language to the contrary, plainly to be regarded as supplemental to rather than exclusive of the authority vested in the various United States district attorneys by the above statute.

It appears from the above that the power to commence a prosecution is not vested solely in the hands of State and local officials of weights and measures. But we seek your hearty cooperation in the enforcement of this act. It is a matter which concerns your administration very closely. It is an excellent piece of legislation and one which will do much to promote uniformity, to standardize trade, and eliminate fraudulent practices in the purchase and sale of a very important class of commodities. It will do much, consequently, to protect both your merchants and consumers. Were the United States Government to attempt the entire enforcement it would require a large appropriation and would to some extent limit your powers as weights and measures officials. But to enforce the act in the manner proposed will render large appropriations unnecessary and will expand the functions of your offices to a considerable degree.

We bespeak your sincere cooperation therefore, and to that end we suggest that you become familiar with the legislation and with the rules and regulations which will shortly be issued by this bureau. We invite correspondence and questions as to any provisions which are not perfectly clear and as to the best method of enforcement to be employed. We request that you investigate conditions in your jurisdiction and give publicity as to the provisions of the act among

those who will be affected thereby. And when the law actually goes into effect from and after the 1st day of July, 1916, we hope that you will proceed to see that all willful violations are brought to the notice of the proper authorities and appropriate proceedings commenced.

The CHAIRMAN. Is there any more business to come before the meeting?

Mr. ROYLANCE. Mr. Chairman, I would like to present for the consideration and the adoption or disappropal of this conference the bill read by myself on yesterday.

The CHAIRMAN. Is there any objection to this?

Mr. FARRELL. I move you that it be referred to the legislative committee.

The CHAIRMAN. You have heard the motion that it be referred to the legislative committee.

(The motion was seconded and agreed to.)

Mr. HOWELL. In view of the complaints that have been filed by the manufacturers, and the feeling on the part of many of us that the recommended specifications and tolerances are not now in such shape that we can safely adopt and enforce them, I move you that a new committee of five be appointed by vote of the conference, such committee to consist of at least two State superintendents of weights and measures and at least two active sealers of weights and measures, such committee to review all of the recommendations to date, conduct personal tests and investigations, confer with merchants, manufacturers, and others, and report at the 1916 conference.

(The motion was seconded.)

Mr. GOODWIN. I move you, sir, that the motion be laid upon the table.

(The last motion was duly seconded.)

The CHAIRMAN. You have heard the proposition to lay this matter upon the table.

(The motion to lay on the table was agreed to.)

The CHAIRMAN. We will now listen to the report of the resolutions committee, Mr. Johnson, chairman.

REPORT OF COMMITTEE ON RESOLUTIONS, PRESENTED BY CHARLES G. JOHNSON.

I will read the resolutions presented:

Resolved, That it is the sense of this convention that the various States of the United States, through properly authorized officials or representatives, shall endeavor to procure uniform legislation by agreement or otherwise between the States on all matters pertaining to the subject of weights and measures, and be it further resolved in this connection that State representatives of weights and measures or members of the legislatures of the various States adopt such means to bring about uniformity of rules, regulations, tolerances, and specifications between the States.

Mr. EGAN. I move the adoption of the resolution.

(The motion was seconded and agreed to.)

Mr. JOHNSON (reading):

Resolved, That the Eleventh Annual Conference on the Weights and Measures of the United States shall be held in the city of New York in the year 1916, and that the executive committee of this association be authorized to select the time of year and the headquarters for the holding of said conference.

The CHAIRMAN. You have heard this resolution. Is there a motion?

Mr. FARRELL. I move its adoption.

(The motion was seconded and defeated.)

Mr. JOHNSON (reading):

Resolved, That the Tenth Annual Conference on the Weights and Measures of the United States held in Washington, D. C., ordain that there be established a national board of examiners to be composed of five members of the National Association of Weights and Measures officials of the United States, and that the duties and responsibilities of this board shall be as follows:

First. Supervision and control over the general subjects of weights and measures with a view of securing a more ready response from weights and measures officials in the United States of America for the adoption of uniform specifications and tolerances.

Second. To receive suggestions and recommendations from weights and measures officials upon which rules and regulations shall be adopted. The decision reached by said board of examiners to be recommended to weights and measures officials of United States as their guide for the creation of uniform regulations, rules, tolerances, and specifications.

Third. That the board of examiners shall hold office for a time not exceeding three years, and that they shall make such rules and regulations for the conduct of their duties providing same are approved by the conference of the National Association of Weights and Measures Officials of the United States.

Be it further resolved, That the method of selecting the members of the board of examiners shall be through a nominating committee of the conference, such recommendations to be voted on by the conference, a majority vote being necessary for a choice; and

Be it further resolved, That on said board of examiners not more than one member or employee of the Bureau of Standards or any of its subdivisions of the Federal Department of Commerce shall be entitled to membership thereon.

A DELEGATE. I move that the resolution be adopted.

(The motion was duly seconded and defeated.)

Mr. JOHNSON (reading):

Resolved, That at the Eleventh National Conference on Weights and Measures that privilege be extended to practical scale experts to present papers or lectures.

Mr. SHERMAN. Do I understand that means to include manufacturers, or simply weighing experts in the employ of corporations that are using scales?

Mr. JOHNSON. The intention of the resolution, no doubt, is to have the conference get the benefit of the experience of practical scale men.

The CHAIRMAN. I interpret that to mean scale experts. That ought to be clear before you vote upon this.

Mr. HOLBROOK. Does that mean papers put upon the program by the executive committee, or does it mean anything they wish to present?

Mr. JOHNSON. I might read the next resolution which touches on the same subject.

Resolved, That representatives of the American Scale Men's Association be invited to attend the Eleventh National Conference on Weights and Measures, and that they be given the privilege of reading a paper on the practical use and testing of railroad track scales.

Mr. HOLBROOK. Is not that a suggestion to the executive committee which plans the program?

Mr. FARRELL. No. It is a direction to it.

The CHAIRMAN. Unless there is objection, we will consider the first resolution.

Mr. REICHMANN. Mr. Chairman, I do not think either one of these is the particular resolution I handed to Mr. Johnson. There are

two scale associations, one with a membership of about 120, and then there is a railroad weighmen's association, which has a membership of about 90. Those are all practical scale men, and I gave Mr. Johnson a resolution that they be invited to attend the conference and also that a day be set aside at the next conference, one-half of which was to be given to the representatives of manufacturers and the other half to these two associations to read papers. I think one resolution will embody all of this.

The CHAIRMAN. The disposition of the conference ought always to be to get at all sides of a question, and I, for one, speaking solely as a member of the conference, would welcome the setting aside of a day to listen to the papers of scale experts. In fact, the executive committee has heretofore placed such papers on the program. I think we ought also to listen, for a certain length of time, to the statements of manufacturers. This is a point which is often brought up at the Bureau of Standards. We handle a great many technical subjects and we never think of having a talk on any of these subjects that we do not bring together the scientific men, the manufacturers, and the users. We will never get the best results until all three are brought together. I want to see the organization limited to your own interest, but at the same time you ought to always be open to what the manufacturers and the experts have to say. It will be entirely in order for this conference to instruct the executive committee as to its wishes.

It appears to me that the true meaning of the two resolutions just read is that it is the sense of this conference that these two interests should have a place upon our program and that the executive committee assign the place. Is that a correct statement of them?

Mr. JOHNSON. I believe your explanation is the true sense of these resolutions and move that it be adopted.

(The motion was seconded and agreed to.)

Mr. JOHNSON. The next resolution is as follows:

Resolved, That the Tenth Annual Conference of Weights and Measures Officials do hereby extend a vote of thanks to the Secretary of Commerce, Hon. William C. Redfield, and the secretary is hereby instructed to prepare in proper form and typewrite a copy of the same to be sent to the Hon. William C. Redfield.

(The motion was seconded and agreed to.)

Mr. JOHNSON (reading):

Resolved, That the Tenth Annual Conference of Weights and Measures Officials do hereby gratefully acknowledge by a vote of thanks their sincere appreciation of the good and generous favors made possible by the untiring efforts of Dr. S. W. Stratton and the members of the Bureau of Standards.

(The motion was seconded and agreed to.)

The CHAIRMAN. Gentlemen, I can assure you we appreciate that, and I want your connection with the bureau to continue with this conference, and I want to announce that any sealer, State, city, or county, will always be welcome at the bureau for so long a time as he wants to stay, and the weights and measures department will always be open to you.

I want to say to the sealers who may have in their charge other matters than the ordinary weights and measures will always find a welcome at the bureau in those particular sections that can help them out in that line. I believe the time is coming when you can use

the bureau very much more than you do to-day. That is the aim of the bureau, to make it useful.

Mr. JOHNSON (reading):

Resolved, That the Tenth Annual Conference of Weights and Measures Officials do hereby extend a vote of thanks to Mr. Warren M. Mitchell for his diligent and generous services as reporter for the conference.

Mr. FARRELL. I move the adoption of the resolution.

(The motion was seconded and agreed to.)

Mr. FARRELL. Since the passage of the resolution requesting uniformity among the States, I wish to announce that the States of New York and Pennsylvania have made a tentative agreement to get together in order to make the regulations and specifications in regard to New York and Pennsylvania as uniform as is possible.

The SECRETARY. Mr. Chairman, I have a resolution handed to me by Mr. Albrecht, of Ohio, signed by Mr. Richardson, of Virginia, and by Mr. Albrecht, which reads as follows:

Whereas the courts of the State of Ohio have pronounced unconstitutional a bill passed by the general assembly of that State, including and having as one of its provisions the gist of a resolution adopted by the National Association of State Superintendents of Weights and Measures at its eighth annual conference, making weight and numerical count the only basis on which certain dry commodities may be sold; and

Whereas our Congress has so far failed to enact a weight and numerical count law applicable to all States, Districts, and Territories of the United States, and which, in our judgment, would be beneficial both to the seller and buyer, and establish the primary object of the formation of this association, namely, uniformity and the abolition of the dual system in weighing and measuring, etc.: Now, therefore, be it

Resolved, That this conference reaffirm its approval of the resolution adopted by the eighth annual conference, and that there be added, after the word "count," the words "unless otherwise agreed in writing by the mutual consent of a buyer and a seller," and that our National Legislature be petitioned by this conference, as a body, to enact laws legalizing sales by weight, numerical count, or special written agreement, and to establish the uniform standard of dimension of all wet and dry measures, such petition being authorized by majority vote of this conference, and to be signed for the conference by its chairman and secretary, and that each State superintendent of every State and every other weight and measure official who is interested in a uniform system of weights and measures is requested to ask his Representative in Congress to support the measure.

Mr. ROYLANCE. I was going to move the adoption of that resolution. That is what the commercial people of the United States want, and we will do what we can to put it through Congress.

(The motion was seconded and agreed to.)

LEGISLATION: ADDITION OF SECTION TO MODEL LAW REQUIRING SALE OF DRY COMMODITIES BY WEIGHT, ETC.

The SECRETARY. There is one number on the program which was omitted, and that is to add a section to the model law adopted by the eighth annual conference to compel the sale of dry commodities by weight or by numerical count only, and to eliminate dry measures. The section I have here, as drawn, does not include the special agreement clause which Mr. Albrecht has put in this resolution. I might ask if the conference desires to take up that matter, inasmuch as the model law, which is introduced in the various States, does not contain that provision at this time, and it seems to be the sense of this conference that that provision is a proper and just one.

Mr. REICHMANN. I move that the secretary change the section prepared to conform to that motion.

(The motion was seconded.)

Mr. ALBRECHT. Mr. Chairman, I would like to state the reason that that clause was put in there, was that the courts held that it was taking away a right of contract; that a man could not go out and sell an orchard of apples or could not sell a load of corn, for he would have to either sell it by weight or by measure, and therefore we had that agreement in writing inserted in that bill, so that men could meet each other otherwise than on a basis of weight or measure. The courts have ruled very strongly on that.

The SECRETARY. The motion is to have the secretary of the conference amend the section proposed for the model law by adding a few words to it, but the section as proposed for the model law has not yet been read.

Mr. REICHMANN. The secretary stated that the proposed amendment to the model law correctly covered what was just passed by this conference in the resolution introduced by Mr. Albrecht and Mr. Richardson. My motion was that the secretary be instructed to frame that amendment to the model law to conform to that resolution.

The CHAIRMAN. That was my understanding. All those in favor say aye, contrary no.

(The motion was agreed to.)

REPORT OF THE COMMITTEE ON NOMINATIONS, PRESENTED BY F. P. DOWNING.

The nominating committee wish to propose the following names:

Dr. S. W. Stratton, Bureau of Standards, president.
William L. Waldron, New Jersey, vice president.
L. A. Fischer, Bureau of Standards, secretary.
J. T. Willett, Indiana, treasurer.

EXECUTIVE COMMITTEE.

S. W. Stratton, Bureau of Standards.
L. A. Fischer, Bureau of Standards.
John F. Farrell, New York.
Thure Hanson, Massachusetts.
J. W. Richardson, Virginia.
Charles G. Johnson, California.
Burr B. Lincoln, Michigan.
T. F. Egan, Connecticut.
F. C. Albrecht, Ohio.
Joseph Hartigan, New York City.
W. F. Cluett, Chicago.
E. W. Van Duyn, Iowa.
James Sweeney, Pennsylvania.
I. M. Howell, Washington.

ELECTION OF OFFICERS.

Mr. REICHMANN. I move that the secretary be instructed to cast one ballot for the election of officers as proposed by the chairman of the nominating committee.

(The motion was seconded and agreed to.)

The SECRETARY. The secretary casts the ballot for the nominees, as instructed, and declares them elected.

Mr. HARTIGAN. I presume the committee on resolutions overlooked one resolution which I wish now to make, and that is to tender the thanks of this conference to Dr. S. W. Stratton for his uniform courtesy, fairness, and justness as the presiding officer of this conference during the last four days.

(The motion was seconded and agreed to.)

Mr. HARTIGAN. I move that the conference extend its thanks to Mr. F. S. Holbrook for acting as secretary of this conference in the absence of Mr. L. A. Fischer.

(The motion was seconded and agreed to.)

The CHAIRMAN. I want to say the success of the meeting has been due largely to Mr. Holbrook and his associates and Mr. Sherman. I think I have been given a great deal more credit than I deserve in this matter. The members of the bureau and I appreciate very much the confidence you have reposed in us.

Mr. RICHARDSON. I do not want New York State to get entirely ahead of us and I desire to extend an invitation to the conference to hold their next meeting in the city of Richmond.

Mr. REICHMANN. I move you that we thank Mr. Richardson for the kind invitation.

(The motion was seconded and agreed to.)

Mr. GRIFFIN. Mr. Chairman, I want to say that while we have no State organization in Missouri, Mr. Dyer and I represent St. Louis, and we feel that we have gained a lot of knowledge, and we will comply with your request to organize the State of Missouri when we go back. We hope to be able to bring our director of public safety here at the next conference.

The CHAIRMAN. The last speaker has mentioned something we have overlooked. The bureau is seriously taking up the work of organization of the States. In the States where they are not doing anything we send a test car and send people out to do everything they can in order to get them interested. I call the attention of the members of the conference to the importance of this work, and wherever you come in contact with the officials of a State who are not doing anything stir them up all you can. You can do a great deal to assist in this matter.

REPORT OF ENTERTAINMENT COMMITTEE, PRESENTED BY JOHN H. SHERMAN.

Mr. SHERMAN. Mr. Chairman, before we adjourn, there is a report to make which I will now read:

REPORT TO THE TENTH ANNUAL CONFERENCE ON WEIGHTS AND MEASURES OF THE UNITED STATES.

Receipts of shad bake: 111 tickets, at $2.50 each		$277.50
Expenditures:		
Food	$136.25	
Train	100.00	
Waiters' tips	8.25	
Balls, bats, and prizes	6.30	
Printing	2.00	
Phone calls, extra car fares, messenger service, and tips	1.35	
		254.15
Balance to treasury		23.35

(Signed) J. H. SHERMAN.

Mr. WALDRON. Mr. Chairman, I move the adoption of the report.

(The motion was seconded and agreed to.)

Mr. SHARP. I move you, Mr. Chairman, that we adjourn.

(The motion was seconded and agreed to, and the conference, at 12.45 o'clock p. m., adjourned.)

APPENDIXES.

APPENDIX 1.—TOLERANCES AND SPECIFICATIONS FOR WEIGHTS AND MEASURES AND WEIGHING AND MEASURING DEVICES.

I. APPLICATION OF TOLERANCES AND SPECIFICATIONS.

These tolerances and specifications are to be construed to apply to the usual types of weights and measures and weighing and measuring devices used in ordinary commercial transactions or usually coming within the jurisdiction of the weights and measures official, but only when a proper classification is herein provided for them. They shall also be construed to apply to apparatus used for special purposes, whenever and in so far as they are clearly applicable, but not otherwise.

II. CLASSIFICATION OF SPECIFICATIONS.

The following specifications on weights and measures and weighing and measuring devices shall be divided into two sets, the first to be retroactive and to apply to all apparatus immediately upon adoption of the specifications, the second to apply only to new apparatus.

For the purpose of administration the following classes of apparatus are established.

Class 1. Weights and measures and weighing and measuring devices which, after the promulgation of these specifications, are manufactured in the State or brought into the State.

Class 2. Weights and measures and weighing and measuring devices which are in the State at the time of promulgation of these specifications, either in use, or in the stock of manufacturers of, or dealers in, such apparatus.

All the specifications shall apply to apparatus of class 1.

The specifications printed in italics shall not apply to apparatus of class 2, and therefore shall not be retroactive.

III. LINEAR MEASURES.

Specifications.—1. Measures of length shall be made of a material, the form and dimensions of which remain reasonably permanent under normal conditions—for example, steel, brass, hardwood, etc.: Provided, however, That tapes for commercial purposes may be made of cloth, but only when this is wire-woven, and when by this means an actual and sufficient reinforcement and permanency is obtained.

2. The ends of measures of length made of wood, or of other nonmetallic material liable to wear away through use, shall be protected by some metal not softer than brass, firmly attached to the measure.

3. Rigid measures of length shall be smooth and straight.

4. Folding measures of length shall be so constructed that each section will come to a definite stop when straightened out.

5. Measures of length shall be graduated in units of the customary system and its usual subdivisions.

6. All graduations shall be clear and distinct and the main graduations shall be plainly designated. The length of these main graduations shall be greater than that of the intermediate graduations, and the latter shall be varied in length in such a way that they may be conveniently read.

7. Graduations shall not be greater in width than one-quarter of the width of the smallest subdivision: Provided, however, That if line graduations are employed, their width shall not exceed 0.03 inch; if raised graduations are employed, their width shall not exceed 0.12 inch at their widest point.

8. All graduations shall be uniformly spaced and be perpendicular to the edge of the measure.

9. Measures of length, so called, defined by tacks driven into a counter, or in any similar way, shall not be allowed.

Tolerances.—The tolerances to be allowed in excess or deficiency on all measures of length except tapes of steel or other metal shall not be greater than the following values: *Provided, however*, That the manufacturers' tolerances or the tolerances to be allowed on all new measures of length, except tapes of steel or other metal, shall not be greater than one-half of the values given.

Length.	Tolerance.
Feet.	Inch.
6.....	3/16
5.....	5/32
4.....	1/8
3.....	3/32
2.....	1/16
1.....	1/32
1/2[1]....	1/64

[1] Or less.

The tolerances to be allowed in excess or deficiency on all tapes of steel or other metal shall not be greater than the following values:

Length.	Tolerance.	Tension.
Feet.	Inch.	Pounds.
100.....	1/4	10
66.....	3/16	10
50.....	1/8	10
33.....	3/32	10
25.....	1/16	10
10.....	1/16	5
6.....	1/32	5
3.....	1/32	5

IV. LIQUID CAPACITY MEASURES (NOT INCLUDING GRADUATED GLASSWARE).

Specifications.—1. Liquid measures shall be made of metal, glass, earthenware, enameled ware, composition, or similar and suitable material, and shall be of sufficient strength and rigidity to withstand ordinary usage without becoming bent, indented, distorted, or otherwise damaged.

2. Liquid measures of the customary system shall be of one of the following capacities only: One gallon, a multiple of the gallon, or a binary submultiple of the gallon; that is, a measure obtained by dividing the gallon by the number 2 or by a power of the number 2: Provided, however, That nothing in this specification shall be construed to prevent the use of forms for ice cream, exclusively, in 5-pint and 3-pint sizes, or bottles for milk or cream in the 3-pint size.

3. Liquid measures shall be so constructed that the capacity is determined by a definite edge, plate, bar, or wire at or near the top of the measure. When one of the last three forms is employed the capacity shall be determined to the lowest point of such plate, bar, or wire.

4. No subdivided liquid measures shall be allowed, and the only reinforcing rings which may be used are those which are firmly attached to the outside of the measure and do not, by indentations or in any other manner, show divisions or lines on the inside surface of the measure.

5. The capacity of the measure shall be conspicuously, legibly, and permanently indicated on the side of the measure. This shall be in combination with the word "Liquid" or the letters "Liq" in the case of measures in which the word "quart" or "pint" occurs. In the case of measures made of earthenware, enameled ware, or composition, this marking shall be of a different color than the measure.

6. If a liquid measure is provided with a tap or spigot, the construction shall be such that the measure may be completely emptied by the tap or spigot while it is standing upon a level surface.

7. When a lip or rim, designed both to facilitate pouring and to receive any overflow, is provided, the measure must be so constructed as to hold its full capacity exclusive of the lip or rim, while it is standing upon a level surface.

Tolerances.—The tolerances to be allowed in excess and in deficiency on all liquid capacity measures shall not be greater than the following values: Provided, however, That the manufacturers' tolerances or the tolerances to be allowed on all new liquid capacity measures shall not be greater than one-half of the values given.

Capacity of measure.	Tolerance.			
	In excess.		In deficiency.	
	Liquid ounces.	Cubic inches.	Liquid ounces.	Cubic inches.
10 gallons	10	18.0	5.0	9.0
5 gallons	6	11.0	3.0	5.4
4 gallons	4	7.0	2.0	3.6
3 gallons	4	7.0	2.0	3.6
2 gallons	2	3.5	1.0	1.8
	Drams.		Drams.	
1 gallon	1	1.8	4.0	.9
1/2 gallon	6	1.4	3.0	.7
1 quart	4	.9	2.0	.5
1 pint	3	.7	1.5	.3
1/2 pint	2	.4	1.0	.2
1 gill	2	.4	1.0	.2

MEASURING PUMPS.

Specifications.—*1. When a measuring pump is provided with adjustable stops, the construction shall be such that each stop can be separately sealed in such a manner that its position can not be changed without destroying the seal.*

2. When a measuring device is provided with a graduated or notched scale to indicate the amount to be delivered, this scale shall be riveted or otherwise permanently fixed in position.

3. The amounts delivered shall not vary by more than the tolerance allowed, irrespective of the speed with which the pump is operated and of the time elapsing between operations.

Tolerances.—The tolerances to be allowed in excess and in deficiency shall not be greater than the values given for the liquid measure of corresponding capacity and kind in the preceding tolerance table for liquid measures.

MILK BOTTLES.

Specifications.—1. Bottles used for the sale of milk or cream shall be made only in sizes heretofore specified under the heading "Liquid Capacity Measures."

2. Each bottle shall have its capacity clearly blown or otherwise clearly and permanently marked in or on the side of the bottle, and in or on the side or bottom the name, initials, or trade-mark of the manufacturer thereof.

3. Glass bottles with an inside diameter of not over 2 inches immediately below the cap-seat or stopple shall hold the correct capacity when filled within one-fourth inch of this cap-seat or stopple; bottles with an inside diameter of over this amount immediately below the cap-seat or stopple shall hold the correct capacity when filled to within one-eighth inch of this cap-seat or stopple: Provided, however, That when bottles are used for the purpose of pasteurizing milk or cream in the bottle, a larger distance shall be allowed below the cap-seat or stopple, but this distance shall not exceed that given in the

table below. Such bottles shall be provided with a clearly defined line blown or otherwise clearly and permanently marked in or on the bottle, and extending at least half-way around it, which indicates the correct capacity. The words "For milk pasteurized in the bottle only" or a similar wording shall be clearly blown or otherwise clearly and permanently marked in or on the side of the bottle; and directly over, below, or beside the line mentioned above, the words, "Fill to this line." Such bottles shall be used only when the milk or cream is pasteurized in the bottle.

Capacity of bottle.	Maximum distance allowable.
	Inches.
2 quarts	2
3 pints	1¾
1 quart	1½
1 pint	1
1/2 pint	5/8
1 gill	5/8

Tolerances.—The tolerances to be allowed in excess or deficiency on individual bottles, and on the average capacity of bottles, shall not be greater than the values shown in the following table. The error on the average capacity of bottles shall be determined by finding the error on each of not less than 25 bottles selected at random from at least four times the number tested, and taking the algebraic mean of these errors.

NOTE.—To find the algebraic mean of a number of errors, first add all those errors which are in excess; then add all those errors which are in deficiency; then subtract the smaller sum from the larger; and finally divide this result by the total number of bottles tested.

Capacity of bottle.	Tolerance on individual bottles.		Tolerance on average capacity.	
	Drams.	Cubic inches.	Drams.	Cubic inches.
1/2 gallon	6	1.4	1.5	0.35
3 pints	5	1.2	1.25	.29
1 quart	4	.9	1.0	.23
1 pint	3	.7	.75	.17
1/2 pint	2	.5	.5	.12
1 gill	2	.5	.5	.12

V. DRY CAPACITY MEASURES.

Specifications.—1. Dry capacity measures, and baskets used as dry measures, shall be made of metal, well-dried wood, or composition, or similar and suitable material, and shall be of sufficient strength and

rigidity to withstand ordinary usage without becoming materially warped, bent, dented, distorted, or otherwise damaged.

2. Dry measures, and baskets used as dry measures, when such are allowed by the other specifications, shall be of one of the following capacities only: One bushel, a multiple of the bushel, or a binary submultiple of the bushel; that is, a measure obtained by dividing the bushel by the number 2 or by a power of the number 2.

3. The capacity of all dry measures, and baskets used as dry measures, shall be conspicuously, legibly, and permanently indicated on the side of the measure. This shall be in combination with the word "dry" in the case of measures in which the word "quart" or "pint" occurs. The letters shall be at least one-half inch high and one-quarter inch wide on measures having a capacity of 1 peck or less, and at least 1 inch high and one-half inch wide on those having a capacity of one-half bushel or more.

4. All dry measures having a capacity of one-half bushel or less shall be cylindrical or conical in shape. If of the latter shape, the top diameter shall be greater than the bottom diameter, but never by an amount exceeding 10 per cent of the latter. In no case shall the bottom diameter exceed the top diameter.

5. The bottoms of all dry measures shall be perpendicular to the axis of the measure and shall be flat, or when made of metal, may be slightly corrugated when such corrugations aid in strengthening the measure. Such corrugations, when employed, shall be parallel or radial straight lines only.

6. Wooden dry measures having a capacity of more than 1 pint shall have a metal band firmly attached around the top.

7. Dry measures, and baskets used as dry measures, having a capacity of 1 bushel or more shall be equipped with handles.

8. Baskets shall not be used as dry measures when having a capacity of less than one-half bushel.

9. Dry measures, and baskets used as dry measures, shall be of such construction that the capacity is determined by the top rim of the measure, and no subdivided measures or baskets shall be allowed.

10. Dry measures shall not be double-ended; that is, have the bottom set part way up into the measure so that both ends may be utilized as measures, either of the same or of different capacities.

11. Dry measures, and baskets used as dry measures, shall not have adjustable or movable bottoms.

12. The minimum diameters of dry measures of various capacities shall conform to the following table:

Capacity of measure.	Minimum diameter.
	Inches.
1/2 bushel	13¾
1 peck	10⅞
1/2 peck	8½
2 quarts	6⅝
1 quart	5⅜
1 pint	4

Tolerances.—The tolerances to be allowed in excess and in deficiency on dry capacity measures and baskets used as dry capacity measures shall not be greater than the following values: Provided, however, That the manufacturers' tolerances or the tolerances to be allowed on all new dry capacity measures and baskets used as dry capacity measures shall not be greater than one-half of the values given:

Capacity of measure.	Tolerance.	
	In excess.	In deficiency.
	Cu. in.	Cu. in.
1 bushel	50.0	25.0
1/2 bushel	30.0	15.0
1 peck	16.0	8.0
1/2 peck	10.0	5.0
2 quarts	5.0	2.5
1 quart	3.0	1.5
1 pint	2.0	1.0
1/2 pint	1.0	.5
1/4 pint	.5	.3

BERRY BASKETS OR BOXES.

Specifications.—1. Baskets or boxes for berries or small fruits, of a capacity of 1 dry quart or less, shall be of one of the following sizes: One quart, 1 pint, or one-half pint, dry measure.

Tolerances.—The tolerances to be allowed in excess or deficiency, on baskets or boxes for berries or small fruits, constructed of wood, shall not be greater than the following values:

Capacity of basket.	Tolerance.	
	In excess.	In deficiency.
	Cu. in.	Cu. in.
1 quart	3	1.5
1 pint	2	1.0
1/2 pint	1	.5

The tolerances to be allowed in excess or deficiency, on baskets or boxes for berries or small fruits, constructed of pasteboard or fiber, shall not be greater than the following values:

Capacity of basket.	Tolerance.	
	In excess.	In deficiency.
	Cu. in.	Cu. in.
1 quart	2.0	1.0
1 pint	1.0	.5
1/2 pint	.5	.25

VI. SCALES.

General specifications.—1. The nominal or rated capacity of a scale is the largest weight indication which can be obtained by the use of all its reading or recording elements in combination.

When one reading or recording element of the scale is designed for auxiliary use only, such as a small bar and poise intended for use in determining weights intermediate between two graduations on the principal bar of the beam, the weight value of this reading or recording element need not be included in the sum, provided that it does not exceed 2 per cent of the sum of the weight values of the remaining reading or recording elements. (Thus, a platform scale with the principal bar of the beam graduated to 100,000 pounds by 1,000-pound subdivisions and with an auxiliary bar graduated to 1,000 pounds by 20-pound subdivisions, may be considered as having a nominal capacity of 100,000 pounds.)

When a scale is designed for use with removable weights and these are furnished with the scale, the amount which these represent when used on the scale shall be included in the sum of the weight values of the reading elements. When the scale is designed for use with removable weights, but these are not furnished with the scale, the amount which those represent on the scale that are usually furnished with the scale when weights are included, shall be included in the sum of the weight values of the reading elements.

2. All scales not equipped with a beam or reading face graduated to the full capacity of the scale, or those not equipped with a graduated beam or reading face, which, taken in connection with another graduated beam or beams or with a graduated runner, indicates the capacity of the scale, shall have the nominal or rated capacity conspicuously, clearly, and permanently marked upon them.

3. All scales shall be of such construction that they will support a load of maximum capacity without undue bending or straining of the parts.

4. All knife-edges shall be firmly secured to the levers.

5. All knife-edges shall be of hardened and tempered steel. They shall be sharp and bear throughout the entire length of the parts designed to be in contact.

6. All bearings shall be smooth and at least as hard as the knife-edges. For scales of more than 5,000 pounds capacity, the bearings shall be made of hardened and tempered steel. (The term "bearing" used in this paragraph refers to the entire surface which is designed to be in contact with the edge of a knife-edge or with a point bearing.)

7. When plates or caps are used to limit the longitudinal motion of a knife-edge, the parts of such plates or caps which are liable to come into contact with the knife-edge shall be smooth and at least as hard as the knife-edge. The parts of the knife-edge liable to come into contact with these plates or caps shall be so formed that the friction between them is reduced to a minimum.

8. If a scale has a nose-iron, the position of this at the time of installation of the scale shall be clearly and accurately indicated.

9. If the scale has interchangeable or reversible parts, these shall be so constructed that their interchange or reversal will not affect the balance or the accuracy of the instrument.

10. No scale shall be equipped with a scoop counterbalanced by a removable poise or weight.

11. When the scale is equipped with a permanently attached device intended to counterbalance the weight of a removable scoop, this device shall clearly indicate on the customers' side of the scale whether the scoop should be on or off the scale.

12. The graduations on all beams shall consist of lines, or notches, or of a combination of these. All lines shall be uniform in spacing and parallel to each other. All notches shall be evenly cut and the lines formed by the intersection of the sloping planes of their sides must be uniform in spacing and parallel to each other. When a combination of lines and notches are employed, the lines must be properly placed with reference to the notches so as to indicate the value of each notch clearly and correctly.

13. Each main weight graduation on a beam shall be so marked as to indicate the weight represented by the poise at that point.

14. Shoulders or stops shall be provided on all beams to prevent the poise traveling and remaining back of the zero graduation.

15. The adjusting material in all poises shall be securely inclosed and firmly fixed in position. If of lead or other material softer than brass, it shall not be in contact with the beam.

16. Poises shall be so constructed that no part can be easily detached, and if equipped with a set screw, this shall not be removable.

17. Poises on notched beams shall be provided with a pawl or other device, so constructed as to cause the poises to be seated into a definite and correct position in each notch, wherever in the notch the pawl or other device is placed, and to be held there firmly and without appreciable movement.

18. The bearing edge of a hanging poise shall be hard and sharp, and shall be so formed as to allow the poise to swing freely in the notches of the beam.

19. Reading edges or indicators of poises shall be sharply defined, and all reading edges shall be parallel to the graduations on the beam.

20. Poises shall not be readily detachable from the beam: Provided, however, That this specification shall not apply to poises on steelyards unless there is a zero graduation on the beam.

21. When scales are equipped with a beam, the position or oscillation of which is used to indicate the balance of the scale, the normal position of this beam shall be horizontal, and it shall have equal play above and below the normal horizontal position.

22. No scale shall be so constructed that the beam is unstable or accelerating.

23. Scale pans in which fish or other wet commodities are placed when weighed shall be so constructed as to provide for drainage.

24. All scales shall be of such construction that they are reasonably permanent in their adjustment and will repeat their weight indications correctly, and are not designed to or may not be used to facilitate the perpetration of fraud.

25. All scales shall be in balance.

A scale is in balance, as the term is used herein, when it correctly gives a weight indication of zero, when there is no load on the platform, plate, pan, or scoop.

A lever scale of the nonautomatic type not having an indicator and a graduated scale or arc, is in balance when the beam comes to rest at, or oscillates through approximately equal arcs above and below, the center of the trig-loop when one is provided; or a position midway between other stops when these are provided; or a horizontal position when no trig-loop or other stops are provided.

A scale of the nonautomatic type having an indicator and a graduated scale or arc is in balance when the indicator comes to rest at, or oscillates through progressively smaller arcs about, a definite and clear zero graduation.

A scale of the automatic type—that is, one having a reading face or dial—is in balance when the indicator comes to rest at a definite and clear zero graduation.

Sensibility reciprocal.—The term "sensibility reciprocal" hereinafter referred to is defined as the weight required to move the position of equilibrium of the beam, pan, pointer, or other indicating device of a scale a definite amount, at the capacity or at any lesser load, the effect of friction in causing inconstancy of this position of equilibrium being eliminated.

In scales provided with a beam and trig-loop, the sensibility reciprocal is the weight required to be placed upon the platform to turn the beam from a horizontal position of equilibrium in the middle of the trig-loop to a position of equilibrium at the top of the loop, the effect of friction being eliminated as above. The sensibility reciprocal may be determined by subtracting the weight instead of adding it, thereby causing the beam to assume a position of equilibrium at the bottom of the loop; or indirectly, by moving the sliding poise on the beam the required amount in either direction, to obtain the specified change in the position of equilibrium of the beam; or by adding or subtracting small weights to or from the counterpoise until the specified change is obtained, and determining the equivalent of the small weights used, in terms of weight on the platform.

In the case of equal-arm scales and scales with a single pan or plate above, or hanging from, the beam, which are not provided with a pointer moving over a graduated arc or scale, the sensibility reciprocal is the amount of weight required on the pan or plate to cause

it to move from its position of equilibrium, when the scale is in balance, to a position of equilibrium at the limit of its motion.

In the case of scales provided with a pointer, and a graduated scale or arc over which the pointer vibrates as a convenient means of determining the position of equilibrium, and which does not of itself directly indicate in terms of weight, the sensibility reciprocal is the weight required to cause a change in the position of rest of the pointer equal to one division on the graduated scale or arc. (Examples of these scales are the usual cream-test or butter-fat-test scale and some forms of the apothecaries' prescription scale.)

The sensibility reciprocal does not apply to reading faces or dials which indicate directly in terms of weight; but no such reading face or dial which is purely auxiliary to the scale mechanism—such as one, for instance, which may or may not be employed in the determination of weight—shall be construed to exempt a scale from the sensibility reciprocal requirement, when this face or dial is detached.

NOTE.—The effect of friction on a scale is to make possible a variation of the load on the pan, plate, or platform without any corresponding change in the indication. The value of the sensibility reciprocal which is determined with the effect of friction present will, therefore, be in error by a variable amount. However, in making tests this error must be neglected.

PLATFORM SCALES.

Definitions.—A platform scale is a scale having a load-receiving platform carried on multiplying levers which transmit the load to the beam or other reading element, such platform having four or more lines of support comprised in bearings which rest directly upon knife-edges in the multiplying levers.

A counter platform scale is a scale of the above type which is especially adapted on account of its compactness, light weight, moderate capacity, and arrangement of parts, for use upon a counter or table. Within the meaning of this definition, a platform scale is a counter platform scale when it conforms to both of the following:

(1) Its weighing capacity is not more than 400 pounds.

(2) Its beam or other reading element is located at an elevation sufficiently low in relation to the weighing platform to be accessible and easily read when the scale is used upon an elevated table or counter.

Specifications.—1. The foundations of all built-in scales shall be firm and substantial.

2. Platform scales having an outside frame around the platform shall be equipped with means for centering and checking the platform. These shall cause the platform bearings to return to their normal line of contact on the knife-edges when the platform is displaced to the full extent allowed and also shall prevent the platform bearings from such a displacement that the centering will not take place. The above results may be obtained by any proper means that will not introduce excessive friction and will not cause binding when the parts have been so caused to return to their normal weighing positions.

3. Platform scales shall be so constructed that there is sufficient clearance between the platform and the frame to allow for any ex-

pansion due to weather effects. Sufficient clearance shall also be provided to prevent the live parts of the scale from binding on account of an ordinary accumulation of dirt or other ordinary causes.

4. A wagon scale should have at least 12 feet of straight driveway on either end of the scale in the same plane as the platform.

5. Platforms and levers shall be of sufficiently rigid construction that the degree of deflection under the maximum load will not endanger the accuracy of the scale.

6. If a scale is equipped with a relieving device, this shall be so constructed that when the beam is balanced and the device is used to relieve it and engage it again, one or more times, the former balance will again be assumed by the beam.

7. When corner platform loops are removable, each shall be so marked or shaped as to identify it with its proper corner.

8. All devices for adjusting the balance of a counter platform scale shall be of such construction that they are operative or accessible only by the use of some tool or device which is outside of and entirely separate from the movable mechanism of the scale itself, such as a screw driver, wrench, etc., but not an adjusting pin.

9. All devices for adjusting the level of a counter platform scale shall be of such construction that they are operative or accessible only by the use of some tool or device which is outside of and entirely separate from the leveling devices, such as a screw driver, wrench, etc., but not an adjusting pin.

10. All platform scales, except track scales, shall be so constructed that when a load consisting of test weights representing one-half or more than one-half of the capacity of the scale, and not exceeding such capacity, is placed so that its center of gravity lies over the points designated by circles in diagram No. 1, the error at each point shall not exceed the tolerance allowed for the load employed. If a load equal to one-quarter of the capacity is used, this shall be placed so that its center of gravity lies directly over the platform bearings designated by the circles in diagram No. 2, and the errors shall not exceed those indicated above.

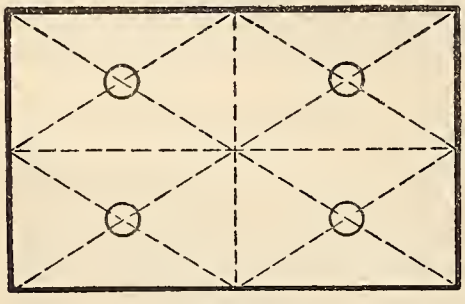

Diagram No. 1.

Diagram No. 2.

11. Any device for altering the sensibility of the scale shall be so limited in its adjustment that the beam can not be made unstable by the manipulation of the device.

12. The minimum travel of the beam in the trig-loop shall conform to the following table:

Length of beam.[1]	Minimum travel of beam in trig-loop.
	Inch.
Under 12 inches	0.4
Over 12 inches, including 20 inches	.5
Over 20 inches, including 40 inches	.7
Over 40 inches	.9

[1] The "length of beam" refers to the distance from the fulcrum to the trig-loop.

13. All weighing beams shall be so marked and graduated and all poises on these beams shall be so constructed that the weight corresponding to any position of the poise can be read directly on the beam. This condition shall be fulfilled whether a registering or stamping device is used or not.

Sensibility reciprocal.—The maximum sensibility reciprocal allowable on all platform scales, except counter platform scales, shall not exceed the value of two of the minimum graduations on the beam at the capacity of the scale or at any lesser load: Provided, however, That the manufacturers' maximum sensibility reciprocal or the maximum sensibility reciprocal on all new platform scales, except counter platform scales, shall not exceed the value of one of the minimum graduations on the beam at the capacity or at any lesser load. The maximum sensibility reciprocals for counter platform scales are given hereafter under the heading "Counter Balances and Scales."

(The term "sensibility reciprocal" means the weight required to move the position of equilibrium of the beam, pan, pointer, or other indicating device of a scale a definite amount. In scales provided with a beam and trig-loop the sensibility reciprocal is the weight required to be placed upon the platform to turn the beam from a horizontal position of equilibrium in the middle of the trig-loop to a position of equilibrium at the top of the loop. The sensibility reciprocal may be determined by subtracting the weight instead of adding it, thereby causing the beam to assume a position of equilibrium at the bottom of the loop; or indirectly, by moving the sliding poise on the beam the required amount in either direction, to obtain the specified change in the position of equilibrium of the beam; or by adding or subtracting small weights to or from the counterpoise until the specified change is obtained, and determining the equivalent of the small weights used, in terms of weight on the platform.)

Tolerances.—The tolerances to be allowed in excess or deficiency on all platform scales, except counter platform scales, shall not be greater than the values shown in the following table: Provided, however, That the manufacturers' tolerances or the tolerances on all new platform scales, except counter platform scales, shall not be greater than one-half of the values given: And provided further, That these

tolerances on all these platform scales shall in no case be less than the value of one of the minimum graduations on the beam, except that the manufacturers' tolerances or the tolerances on new apparatus shall in no case be less than the value of one-half of one of the minimum graduations on the beam. The tolerances for counter platform scales are given hereafter under the heading "Counter Balances and Scales."

Load.	Tolerance, Class A.		Tolerance, Class B.	
	On ratio.	On beam.	On ratio.	On beam.
Pounds.	Ounces.	Ounces.	Ounces.	Pounds.
50	½	1	.....	.....
100	1	2	.....	.....
200	2	4	.....	.....
240	3	6	.....	.....
300	3	6	.....	.....
400	4	8	.....	.....
500	5	10	10	1¼
600	6	12	12	1½
		Pounds.	Pounds.	
800	8	1	1	2
1,000	8	1	1	2
1,200	10	1¼	1¼	2½
1,500	12	1½	1½	3
1,800	14	1¾	1¾	3½
	Pounds.			
2,000	1	2	2	4
2,500	1¼	2½	2½	5
4,000	2	4	4	8
6,000	3	6	6	12
8,000	4	8	8	16
10,000	5	10	10	20
12,000	6	12	12	24
16,000	8	16	16	32
20,000	10	20	20	40
24,000	12	24	24	48
30,000	15	30	30	60
40,000	20	40	40	80
80,000	40	80	80	160
100,000	50	100	100	200
160,000	80	160	160	320
200,000	100	200	200	400
300,000	150	300	300	600
400,000	200	400	400	800

NOTE.—Explanation of above table will be found on following page.

Explanation of preceding table.—"Class A" scales include the following: Scales of the portable platform type; and also scales of the dormant type which are installed inside of a building having side walls and roof, which protect the scale from weather effects and from sudden changes of temperature.

"Class B" scales include the following: Scales of the railroad track and wagon types; and also scales of the dormant type which are not installed inside of a building having side walls and roof, and which are exposed to weather effects and sudden changes of temperature.

NOTE.—The latter effect, since it causes the condensation of moisture on the scale parts, often has as serious results on the condition of the scale as have weather effects.

The columns with the heading "Tolerance on ratio" refer to the error in the ratio or multiplying power of scales with which counterpoise weights are used.

The columns with the heading "Tolerance on beam" refer to those parts of scales not requiring the use of removable weights; for example, a beam.

The column with the heading "Load" refers to the amount of weight on the platform of the scale.

Application of tolerances to railroad track scales.—In the case of railroad track scales, designed and used for weighing ordinary freight traffic, when the test load consists of a one-truck test car, the largest algebraic mean of any two errors found for different positions of the test truck shall not exceed the tolerance corresponding to the test load used: Provided, however, That no two errors shall be selected, corresponding to positions of the test truck closer together than the distance between extreme positions which the truck can assume on opposite ends of the shortest span. The tolerance given in the table is not to be applied to the error found for a single position of the test load. (The largest algebraic mean of any two errors may be defined as one-half of the largest plus (+) or minus (—) sum that can be obtained by adding any two errors, such as two plus errors, two minus errors, a numerically large plus error and a numerically small minus error, or a numerically large minus error and a numerically small plus error.)

In order that the largest algebraic mean of any two errors, which represents the maximum error of freight car weighing, may not differ appreciably from the true amount, a test car having a wheel base not exceeding 7 feet should be used.

COUNTER BALANCES AND SCALES.

Definition.—A counter scale is a scale of any type which is especially adapted on account of its compactness, light weight, moderate capacity, and arrangement of parts, for use upon a counter or table. It is to be noted, however, that those types embraced in the definitions of platform scales, spring scales, and cream-test and butter-fat-test scales are considered under their specific headings.

Specifications.—1. Bearings shall be so shaped that when the beam or levers are displaced in any manner, the knife-edges will return to

their proper lines of contact. (The term "bearing" as used in this specification is defined as that part of the scale designed to be in contact with the edge of the knife-edge.)

2. All loose material used for adjusting the balance of a scale shall be securely enclosed.

3. All devices for adjusting the balance of a counter scale shall be of such construction that they are operative or accessible only by the use of some tool or device which is outside of and entirely separate from the movable mechanism of the scale itself, such as a screw-driver, wrench, etc., but not an adjusting pin.

4. All devices for adjusting the level of a counter scale shall be of such construction that they are operative or accessible only by the use of some tool or device which is outside of and entirely separate from the leveling devices, such as a screw driver, wrench, etc., but not an adjusting pin.

5. Counter scales whose weight indications are changed by an amount greater than one-half the tolerance allowed, when set in any position on a surface making an angle of 5 per cent or approximately 3 degrees with the horizontal, shall be equipped with a device which will indicate when the scale is level, and in no case shall any pendulum operating the scale be considered a leveling device. The scale shall be rebalanced at zero each time its position is altered during this test.

6. In the case of equal-arm scales, either with stabilized pans or plates—that is, those above the beam—or with suspended pans or plates, the minimum fall or drop of the pans or plates from their highest point shall be as follows:

Capacity.	*Minimum fall.*
	Inch.
Four pounds and below	*0.35*
From 4 pounds, including 12 pounds	*.5*
From 12 pounds, including 26 pounds	*.75*
Over 26 pounds	*1.0*

7. In the case of counter scales having unequal arms or having a compound lever system, and equipped with a graduated beam which is not provided at or near its end with a trig loop or graduated scale or arc or other suitable reference interval or point for establishing the proper position of balance of the beam, the beam shall have a minimum total angular play of 8 per cent or approximately 5 degrees. In case such scales are provided with a trig loop or graduated scale or arc or other suitable reference interval or point, the minimum total movement of the beam at such point shall be 0.4 inch if the beam is 12 inches or less in length and 0.5 inch if the beam is over 12 inches in length. (The angular motion of the beam in terms of per cent may be obtained by dividing the total fall or drop of the beam at its end by the distance from the fulcrum to the end of the beam and multiplying this quotient by 100.)

8. Scales of such construction that any weight or weights which are not visible can be added so as to affect the indications of the scale shall be equipped with a device which will plainly indicate on the customers' side of the scale when the weight or weights have been added and the value which it or they represent on the scale.

9. On scales of the equal-arm type with stabilized pans—that is, pans above the beam—the under connections and a line connecting the outer knife-edges in the beam shall form a parallelogram. These under connections shall be straight and work freely.

10. All scales shall be so constructed that when a weight whose body has approximately equal diameter and height and which represents one-half of the capacity of the scale, is shifted in any direction on the weight plate or on the commodity plate, pan, or scoop to a point one-half the distance between the center and edge of the weight plate or the commodity plate, pan, or scoop, the additional resulting error in the weight indication, due to this cause alone, shall not exceed the tolerance allowed at the load in question given in the column headed "Tolerance on parts requiring employment of removable weights": Provided, however, That in this test the edge of the weight shall not be made to project over the edge of the weight plate or the commodity plate, pan, or scoop.

11. In the case of counter scales equipped with an indicator and a reading face or dial, such parts shall conform to all the specifications applicable to them, given under the heading "Spring Scales," except that the graduations are not required to be equally spaced.

12. All counter scales shall be in level.

Sensibility reciprocal.—The maximum sensibility reciprocal allowable for counter scales shall not exceed the values given in the table below, at the capacity or at any lesser load, with the exception that when the maximum sensibility reciprocal herein given is a larger value than that represented by two of the minimum graduations on any beam with which the scale may be equipped, the latter value shall be applied and used as the maximum sensibility reciprocal, at the capacity or at any lesser load: Provided, however, That the manufacturers' maximum sensibility reciprocals or the maximum sensibility reciprocals on all new counter scales shall be one-half of the values given in the table unless this value is greater than one of the minimum graduations on the beam, in which case this latter value shall be used.

(The term "sensibility reciprocal" means the weight required to move the position of equilibrium of the beam, pan, pointer, or other indicating device of a scale a definite amount. In the case of equal-arm scales and scales with a single pan or plate above, or hanging from, the beam, which are not provided with a pointer moving over a graduated scale or arc, the sensibility reciprocal is the amount of weight required on the pan or plate to cause it to move from its position of equilibrium, when the scale is in balance, to a position of equilibrium at the limit of its motion.)

Capacity.	Maximum sensibility reciprocal allowable.	Capacity.	Maximum sensibility reciprocal allowable.
Pounds.	Ounces.	Pounds.	Ounces.
1	1/8	24	1
2	1/8	25	1
4	1/4	30	1
5	1/4	40	1¼
6	1/4	50	1½
8	1/2	60	1½
10	1/2	75	2
12	1/2	90	2½
15	3/4	100	3
20	3/4		

Tolerances.—Except on the special tests described above, the tolerances to be allowed in excess or deficiency on counter scales shall not be greater than the values shown in the following table: Provided, however, That the manufacturers' tolerances or the tolerances to be allowed on new counter scales shall not be greater than one-half of the values given: And provided further, That the tolerance on counter scales at any load shall in no case be less than one-fourth of the sensibility reciprocal of the scale at the load in question; and when the scale has a reading face or dial, the tolerance shall in no case be less than one-fourth of the minimum graduation on the reading face or dial, except that on new scales they shall in no case be less than one-eighth of such minimum graduation.

Load.	Tolerance on parts requiring employment of removable weights.	Tolerance on beam or reading face.	Load.	Tolerance on parts requiring employment of removable weights.	Tolerance on beam or reading face.
Pounds.	Ounces.	Ounces.	Pounds.	Ounces.	Ounces.
1	1/16	1/16	40	7/16	5/8
2	1/16	1/8	50	1/2	3/4
4	1/8	3/16	60	5/8	1
5	1/8	3/16	75	3/4	1
6	1/8	3/16	90	7/8	1¼
8	1/4	3/8	100	1	1½
10	1/4	3/8	150	1½	2
12	1/4	3/8	200	2	3
15	5/16	1/2	240	2½	4
16	5/16	1/2	250	2½	4
20	5/16	1/2	300	3	4½
24	3/8	1/2	350	3½	5
25	3/8	1/2	400	4	6
30	3/8	5/8			

SUSPENSION SCALES OF THE LEVER TYPE.

Definition.—Suspension scales of the lever type are lever scales designed and adapted to be hung from or attached to some support above and outside of the structure of the scale itself, and which are not included within other classes herein defined. This class shall include steelyards, butchers' meat beams, suspension abattoir scales, crane scales, overhead tramway scales, suspension creamery scales, and the like.

Specifications and tolerances.—Suspension scales of the lever type having a capacity of more than 400 pounds shall be subject to the same specifications, in so far as these are applicable, and the same sensibility reciprocals and tolerances as platform scales. Suspension scales of the lever type having a capacity of 400 pounds or less shall be subject to the same specifications, in so far as these are applicable, and the same sensibility reciprocals and tolerances as counter scales.

SPRING SCALES.

Definition.—A spring scale is a scale in which the weight indications depend upon the change of shape or of dimensions of an elastic body or system of such bodies: Provided, however, That scales in which metallic bands or strips are employed for the primary purpose of fulfilling the functions of knife-edges and bearings shall not be considered spring scales within the meaning of this definition.

Specifications.—1. Graduated faces shall be permanently fixed in position.

2. All graduations shall be clear and distinct and equally spaced.

3. The clear interval between the graduations shall not be less than 0.04 inch.

4. The maximum value of the graduations on spring balances used in the sale of foodstuffs at retail shall be 1 ounce: Provided, however, That this shall not apply to scales used exclusively in the sale of vegetables.

5. The scale shall have a definite and clear zero graduation and there shall be no stop to prevent the indicator from going beyond the zero graduation. These conditions shall be fulfilled whether the entire face is graduated or the graduations commence at a fixed load.

6. The indicator shall be firmly attached and reach to the graduated divisions.

7. That part of the indicator which reaches to the smallest subdivisions shall not exceed the width of these subdivisions.

8. The distance between the indicator and the reading face shall not exceed 0.12 inch.

9. All devices for adjusting the balance of a spring scale shall be of such construction that they are operative or accessible only by the use of some tool or device which is outside of and entirely separate from the movable mechanism of the scale itself; such as a screwdriver, wrench, etc., but not an adjusting pin.

10. All devices for adjusting the level of a spring scale shall be of such construction that they are operative or accessible only by the use of some tool or device which is outside of and entirely separate from

the leveling devices; such as a screw-driver, wrench, etc., but not an adjusting pin.

11. No device to alter the working or effective length of the spring shall be placed on the outside of the scale.

12. Spring balances of the hanging type shall be freely suspended from the ring when in use.

13. If scales are provided with a hanging pan, this shall be suspended from a ring and no hook will be allowed. A hook may be used only on those scales for which no pan is provided.

14. All scales shall be so constructed that when a weight whose body has approximately equal diameter and height and which represents one-half of the capacity of the scale, is shifted in any direction on the commodity plate, pan, or scoop to a point one-half the distance between the center and the edge of the plate, pan, or scoop, the additional resulting error in the weight indication, due to this cause alone, shall not exceed the tolerance allowed at the load in question given in the column headed "Added tolerance for shift test at half capacity": Provided, however, That in this test the edge of the weight shall not be made to project over the edge of the commodity plate, pan, or scoop.

15. Spring scales whose weight indications are changed by an amount greater than one-half the tolerance allowed, when set in any position on a surface making an angle of 5 per cent or approximately 3 degrees with the horizontal shall be equipped with a device which will indicate when the scale is level. The scale shall be rebalanced at zero each time its position is altered during this test.

16. Spring balances of such construction that a weight or weights which are not visible can be added so as to affect the indications of the scale, shall be equipped with a device which will clearly indicate on the customers' side of the scale when the weight or weights have been added, and the value which it or they represent on the scale.

17. Spring balances shall give correct weight indications whether the load on the plate, pan, or scoop is being increased or decreased.

18. The specifications for each part of combination spring and lever scales shall be the same as those for the type of scale to which such part belongs.

19. All counter spring scales shall be in level.

Tolerances.—Except on the special tests described above, the tolerances to be allowed in excess or deficiency on all spring scales equipped with a device intended to compensate for changes in the elasticity of the springs due to temperature effects, shall not be greater than the values given in the tolerance table under the heading "Counter Balances and Scales."

Except on the special tests described above, the tolerances to be allowed in excess or deficiency on all spring scales not equipped with a device intended to compensate for changes in the elasticity of the springs due to temperature effects, shall not be greater than the values shown in the following table: Provided, however, That the manufacturers' tolerances or the tolerances to be allowed on all new spring scales described herein shall not be greater than one-half of the values given.

However, the tolerances on all spring scales described in the two preceding paragraphs shall in no case be less than one-fourth of the minimum graduation on the reading face or dial, except that on new spring scales they shall in no case be less than one-eighth of such minimum graduation.

Load.	Tolerance.	Added tolerance for shift test at half capacity.	Load.	Tolerance.	Added tolerance for shift test at half capacity.
Pounds.	Ounces.	Ounces.	Pounds.	Ounces.	Ounces.
1	1/8	1/16	40	2	7/16
2	1/4	1/16	50	3	1/2
3	1/4	1/16	60	3	5/8
4	1/2	1/8	75	4	3/4
5	1/2	1/8	90	4	7/8
6	1/2	1/8	120	5	1¼
7	1/2	1/4	150	6	1½
8	3/4	1/4	200	8	2
10	3/4	1/4	300	12	3
12	1	1/4		Pounds.	
15	1	5/16	400	1	.....
20	1½	5/16	500	1¼	.....
24	1½	3/8	600	1½	.....
25	1½	3/8			
30	2	3/8			

STRAIGHT-FACE SPRING SCALES.

Definition.—A straight-face spring scale is a spring scale in which an indicator or graduated face is affixed to a spring without intervening mechanism and registers the extension of the spring on a straight graduated face.

Specifications.—1. The support for the spring shall be of sufficient strength and rigidity to sustain the capacity load of the scale without perceptible strain, and such support shall be permanently fixed to the frame of the scale.

2. The graduated face shall be firmly riveted to the frame at not less than three points.

3. The indicator shall be pointed in order to facilitate accurate reading, and it shall not obscure the figures showing the value of the graduations.

4. The value and spacing of the graduations shall satisfy the requirements of the following table:

Capacity.	*Maximum value of interval.*	*Minimum distance between graduations.*
Pounds.	*Pounds.*	*Inch.*
25.....	*1/2*	*0.03*
50.....	*1*	*.03*
100.....	*1*	*.03*
200.....	*2*	*.03*
300.....	*5*	*.04*
400.....	*5*	*.04*
500.....	*5*	*.04*

Tolerances.—The tolerances to be allowed in excess or deficiency on all straight-face spring balances shall not be greater than four times the values given under the heading "Spring Balances," subheading "Tolerances."

COMPUTING SCALES.

Definition.—A computing scale is a scale which, in addition to indicating the weight, indicates the total price of the amount of commodity weighed for a series of unit prices.

Specifications.—1. Computing scales shall be correct in both their weight and value indications.

2. Computing scale charts shall not repeat the same values in any given column or row. This applies also to charts on which the value graduations are correctly placed, but which, in addition, have a duplication of value figures in any given column or row.

3. The value graduations on all computing charts shall not exceed 1 cent on all prices per pound up to and including 30 cents. At any higher price per pound the value graduation shall not exceed 2 cents: Provided, however, That nothing in the above shall be construed to prevent the placing of a special value graduation to represent each 5-cent interval. These special graduations may take the form of dots, staggered graduations, or similar forms. They shall be so placed that their meaning and value may be clearly understood, but they shall not be placed in the space between the regular graduations.

4. All computing scales equipped with a drum-shaped chart shall be so constructed that the opening on the dealers' side discloses at least two value graduations at the lowest price per pound. These scales shall be so constructed that the opening on the customers' side discloses the smallest graduations and a figure representing the proper number of main weight units when any load is placed on the pan or platform.

5. All computing scales shall be equipped with weight indicators on both the dealers' and customers' sides, *and their width shall not exceed 0.015 inch.* The distance between the chart and the weight indicators shall in no case exceed 0.06 inch. Both indicators shall reach to the graduated divisions and shall indicate clearly and correctly.

6. All computing scales shall be equipped with a value indicator on the dealers' side, *and its width shall not exceed 0.015 inch.* The distance between the chart and the value indicator shall in no case exceed 0.06 inch. This indicator shall reach to each value graduation and shall indicate clearly and correctly.

7. The weight graduations and the value graduations shall be clear and distinct, but in no case shall their width be less than 0.008 inch.

8. The maximum value of the weight graduations on computing scales used in the sale of foodstuffs at retail shall be 1 ounce.

9. The clear interval between the weight graduation marks on all computing scales shall not be less than 0.04 inch. The clear interval between the value graduations marks on all computing scales shall not be less than 0.02 inch: Provided, however, That the latter requirement shall not be construed to apply to the special value graduation denoting the 5-cent interval, mentioned heretofore.

10. All devices for adjusting the balance of a computing scale shall be of such construction that they are operative or accessible only by the use of some tool or device which is outside of and entirely separate from the movable mechanism of the scale itself, such as a screw driver, wrench, etc., but not an adjusting pin.

11. All devices for adjusting the level of a computing scale shall be of such construction that they are operative or accessible only by the use of some tool or device which is outside of and entirely separate from the leveling devices, such as a screw dricer, wrench, etc., but not an adjusting pin.

12. Computing scales whose weight indications are changed by an amount greater than one-half the tolerance allowed, when set in any position on a surface making an angle of 5 per cent or approximately 3 degrees with the horizontal, shall be equipped with a device which will indicate when the scale is level, and in no case shall any pendulum operating the scale be considered a leveling device. The scale shall be rebalanced at zero each time its position is altered during this test.

13. Computing scales shall give correct results whether the load is being increased or decreased.

14. All devices intended to increase the capacity of computing scales by the addition of an added weight or weights shall operate properly irrespective of the speed with which they are manipulated.

15. All counter computing scales shall be in level.

16. The specifications on a computing scale and on all parts of a computing scale, when not modified by the above, shall be the same as those of the type to which the scale under test belongs.

17. When the scale is of such a type that the definition of sensibility reciprocal is applicable, the maximum allowable sensibility reciprocal shall be the same value as is permitted for a noncomputing scale of the appropriate type.

Tolerances.—Except on the special tests described above, the tolerances to be allowed in excess or deficiency on all spring computing scales equipped with a device intended to compensate for changes in the elasticity of the springs due to temperature effects, and also all those not operated by springs, shall not be greater than the values given in the tolerance table under the heading "Counter Balances and Scales."

Except on the special tests described above, the tolerances to be allowed in excess or deficiency on all spring computing scales not

equipped with a device intended to compensate for changes in the elasticity of the springs due to temperature effects, shall not be greater than the values given in the tolerance table under the heading "Spring Balances."

However, the tolerances on all computing scales equipped with a reading face or dial shall in no case be less than one-fourth of the minimum weight graduation on the reading face or dial, except that on new computing scales they shall in no case be less than one-eighth of such minimum weight graduation.

CREAM-TEST AND BUTTER-FAT-TEST SCALES.

Definition.—A cream-test or butter-fat-test scale is a scale especially designed and adapted for determining the fat content of cream or butter.

Specifications.—*1. All scales shall be provided with a graduated scale or arc divided into at least 10 equal spaces, over which the indicator shall play.*

2. The clear interval between the graduations on the graduated scale or arc shall not be less than 0.05 inch.

3. The indicator shall be of such length as to reach to the graduated divisions and shall terminate in a fine point to enable the readings to be made with precision.

4. All scales whose weight indications are changed by an amount greater than one-half the tolerance allowed, when set in any position on a surface making an angle of 5 per cent or approximately 3 degrees with the horizontal, shall be equipped with leveling screws and with a device which will indicate when the scale is level. The scale shall be rebalanced at zero each time its position is altered during this test.

5. All scales shall be so constructed and adjusted that when the pans are released or disturbed the pointer will return to its original position of equilibrium.

Sensibility reciprocal.—The maximum sensibility reciprocal allowable for these scales shall not exceed one-half grain or approximately 30 milligrams, when the maximum load is placed upon the scale.

(The term "sensibility reciprocal" means the weight required to move the position of equilibrium of the beam, pan, pointer, or other indicating device of the scale a definite amount. In scales provided with a pointer and a graduated scale or arc, such as the above, the sensibility reciprocal is the weight required to cause a change in the position of rest of the pointer equal to one division on the graduated scale or arc.)

Tolerances.—The tolerance to be allowed in excess or deficiency on all cream-test and butter-fat-test scales shall not be greater than one-half grain or approximately 30 milligrams, when the scale is loaded to capacity.

VII. WEIGHTS.

Specifications.—1. Weights shall be made of steel, iron, brass, or any other metal or alloy of metals not softer than brass: Provided, however, That weights below one-fourth ounce shall not be made of iron or steel, but may be made of aluminum.

2. Weights shall have smooth surfaces and no sharp points or corners.

3. Weights shall not be covered with a soft or thick coat of paint or varnish.

4. All holes in which foreign material is to be placed for adjusting purposes must be of such form that this material will be permanently and securely held in place. In no case shall this adjusting material project beyond the surface of the weight.

5. Rings on weights shall not be split or removable.

6. All weights shall be clearly marked with their nominal value, and in addition weights intended for use on multiplying-lever scales shall be clearly marked with the value they represent when used upon the scale for which they are intended.

Tolerances.—The tolerances to be allowed in excess or deficiency on commercial weights shall not be greater than the following values: Provided, however, That the manufacturers' tolerances or the tolerances to be allowed on new commercial weights shall not be greater than one-half of the values given.

Avoirdupois System.

Weight.	Tolerance, ordinary weights (ratio 1:1).	Tolerance, counterpoise weights for multiplying-lever scales.		
		Ratio less than 100:1.	Ratio 100:1 and less than 1,000:1.	Ratio 1,000:1 and over.
Pounds.	Grains.	Grains.	Grains.	Grains.
50	100.0	60.0	40.0	20.0
25	60.0	36.0	24.0	12.0
20	60.0	36.0	24.0	12.0
15	40.0	24.0	16.0	8.0
10	40.0	24.0	16.0	8.0
8	30.0	18.0	12.0	6.0
5	30.0	18.0	12.0	6.0
4	20.0	12.0	8.0	4.0
3	20.0	12.0	8.0	4.0
2	15.0	9.0	6.0	3.0
1	10.0	6.0	4.0	2.0
Ounces.				
10	10.0	6.0	4.0	2.0
8	5.0	3.0	2.0	1.0
5	5.0	3.0	2.0	1.0
4	5.0	3.0	2.0	1.0
2	3.0	1.8	1.2	.6
1	2.0	1.2	.8	.4
1/2	2.0	1.2	.8	.4
1/4	1.0	.6	.4	.2
1/8	.5	.3	.2	.1
1/16	.5	.3	.2	.1
1/32	.5	.3	.2	.1
1/64	.2	.12	.08	.04

The tolerances to be allowed in excess or deficiency on apothecaries' prescription weights shall not be greater than the following values: Provided, however, That the manufacturers' tolerances or the tolerances to be allowed on new apothecaries' prescription weights shall not be greater than one-half of the values given.

Apothecaries' System.

Weight.	Tolerance.	Weight.	Tolerance.
Ounces troy.	Grains.	Scruples.	Grains.
12	4.0	3	0.3
10	4.0	2	.25
8	3.0	1	.15
5	3.0	Grains.	
4	2.0	20	.15
3	2.0	10	.12
2	2.0	5	.08
1	1.0	2	.04
Drams.		1	.03
8	1.0	.5	.02
6	1.0	.2	.015
4	.7	.1	.01
3	.6		
2	.5		
1	.3		
.5	.2		

Metric System.

Weight.	Tolerance.	Weight.	Tolerance.
Grams.	Milligrams.	Milligrams.	Milligrams.
500	350.0	500	7.0
200	200.0	200	4.0
100	150.0	100	3.0
50	100.0	50	2.0
20	50.0	20	1.0
10	40.0	10	1.0
5	25.0		
2	15.0		
1	10.0		

VIII. METRIC SYSTEM.

No specifications contained in the preceding pages shall be understood or construed to prohibit the sale or use of weights and measures or weighing or measuring devices constructed or graduated in units of the metric system.

The tolerances to be allowed on any weight or measure or weighing or measuring device constructed or graduated in units of the metric system, shall be the same as those specified on similar apparatus of an equivalent size or at an equivalent load in the customary system.

APPENDIX 2.

On the following pages are given those comments and objections of various manufacturers to the advance copy of the report on tolerances and specifications, which were submitted in writing to the committee, and which are specific and refer to definite tolerances and specifications, but which could not be read at the conference on account of lack of time (see p. —). Statements of the committee, made in answer to these comments and objections which would have been given at the conference at the time that these were read, are printed in connection with them.

SCALES: GENERAL SPECIFICATIONS—SPECIFICATION NO. 1.

TEXT.

The nominal or rated capacity of a scale is the largest weight indication which can be obtained by the use of all its readings or recording elements in combination. * * * When a scale is designed for use with removable weights, and these are furnished with the scale, the amount which these represent when used on the scale shall be included in the sum of the weight values of the reading elements.

COMMENT OF MANUFACTURER.

This paragraph is drawn, as we understand it, so that the total value of the weights which a manufacturer sends out with a scale, together with the weight value of the beam or reading face, shall be considered the capacity of the scale. This specification is a proper one for most of the scales in common use, but there are certain scales used in the industries, such as sacking scales, the regular complement of weights for which greatly exceeds in total the rated capacity of the scale. A scale of this character, such as the sacking scale, is supplied with an assortment of weights, each one of which is designed to equal a certain amount of flour on the platform. Thus we furnish a 196-pound weight, which equals one barrel of flour, and we also furnish similar weights designed to be used for sacking fractional parts of a barrel, and the total value of all these weights is greater than the rated capacity of the scale; in fact, a scale of this character has no rated capacity, strictly speaking, unless it might be considered that the highest value weight, 196 pounds, might be considered as the maximum capacity of the scale, which in fact it would be when the scale was used for the purpose for which it was designed, manufactured and sold.

STATEMENT OF COMMITTEE.

It appears that this objection no longer has any application, in view of the "Amendments to Tentative Report of Committee on Tolerances and Specifications," made by the committee and adopted by the conference. The particular amendment disposing of the above objection reads as follows:

Application of specifications. These definitions, specifications, and tolerances are to be construed to apply to the usual types of weights and measures and weighing and measuring devices used in ordinary commercial transactions or

usually coming within the jurisdiction of weights and measures official, but only when a proper classification is herein provided for them. They shall also be construed to apply to apparatus used for special purposes whenever and in so far as they are clearly applicable, but not otherwise.

The committee believes that the "sacking scale" mentioned above falls in the class described as "apparatus used for special purposes," and that the capacity definition clearly is not applicable to this type of scale. Therefore the capacity is not to be considered as the sum of the separate weights furnished with this scale. As suggested by the manufacturer, the capacity of this scale would be the maximum load which the scale would be required to carry when used for the purpose for which it was designed, manufactured, and sold. In this case it would be 196 pounds plus the weight of the empty barrel.

It may be noted at this time, however, that specification No. 2, under the heading "Scales: General specifications," is applicable to the sacking scale mentioned here, and that the capacity should, therefore, be marked upon scales of this type and of similar types.

SCALES: GENERAL SPECIFICATIONS—SPECIFICATION NO. 20.

TEXT.

Poises shall not be readily detachable from the beam.

COMMENT OF MANUFACTURER.

This specification is all right when applied to scales of the portable, dormant, wagon, and railroad variety, when such scales are designed for use in selling commodities. There are several classes of scales of extended use, in which the design is such that the scale is to be used with a poise that is purposely detachable. We refer here to such scales as the weighmaster or cotton beam outfits, which are very widely used, and which have one or more detachable poises of different values. There is also the beam for determining the weight of a ream of paper by weighing one sheet, etc., which is equipped with rider poises of different values that must necessarily be detachable. There are numerous special scales made for use in manufacturing processes where rider poises of different values are employed on the same beam, and these must necessarily be detachable to meet the requirements of certain manufacturing processes. Broadly speaking, specifications as written would prohibit the use of all of the foregoing devices, which no doubt was the furthest from the intention of your committee.

STATEMENT OF COMMITTEE.

It appears that this objection also no longer has any application. In the case of weighmaster or cotton beam outfits the objection has apparently been disposed of by the change in this specification made by the "amendments" adopted at the conference. The requirement now reads as follows:

Poises shall not be readily detachable from the beam: *Provided, however,* That this specification shall not apply to poises on steelyards unless there is a zero graduation on the beam.

It is believed that in every case in which two poises on a steelyard are to be used interchangeably the beam is so constructed that the balancing is to be done with both poises removed, and that the graduations commence at a fixed load other than zero. Therefore in all these cases the requirement that the poises be not readily detachable no longer applies.

In so far as the other scales mentioned are concerned, they apparently fall within the class described as "apparatus used for special purposes" which is mentioned in the statement immediately preceding.

PLATFORM SCALES—SPECIFICATION NO. 12.

TEXT.

The minimum travel of the beam in the trig loop shall conform to the following table:

Length of beam.[1]	Minimum travel of beam in trig loop.
	Inch.
Under 12 inches	0.4
Over 12 inches, including 20 inches	.5
Over 20 inches, including 40 inches	.7
Over 40 inches	.9

[1] The "length of beam" refers to the distance from the fulcrum to the trig loop.

COMMENT OF MANUFACTURER.

* * * we have considered that the travel of 1 inch in the trig loop of a 12-inch beam is a good distance. Four inches, as stated, would bring the beam so much out of level that the poises would not remain in position on beam.

STATEMENT OF COMMITTEE.

The manufacturer has misread the specification. The requirement is for four-tenths inch and not 4 inches, as stated.

PLATFORM SCALES—SENSIBILITY RECIPROCAL.

TEXT.

The maximum sensibility reciprocal allowable on all platform scales, except counter platform scales, shall not exceed the value of two of the minimum graduations on the beam, at the capacity of the scale or at any lesser load. Provided, however, that the manufacturers' maximum sensibility reciprocal or the maximum sensibility reciprocal on all new platform scales, except counter platform scales, shall not exceed the value of one of the minimum graduations on the beam at the capacity or at any lesser load. * * *

COMMENT OF MANUFACTURER.

We think your specifications as to the sensibility reciprocal being related to the minimum graduation on the beam is perfectly proper when applied to scales used for determining the value of commodities sold in trade. There is another considerable field, however, in which the sensibility reciprocal should not bear this same relation to the minimum graduation of the beam. We refer to scales used in manufacturing operations, where the purchasers thereof require and insist upon a beam with finer minimum divisions than the lever system will respond to, the plea offered to us as manufacturers for this requirement that such purchasers have the idea that they desire to make certain a careful reading of the beam by their employees and hence desire the beam graduated to a degree of fineness which, as stated, the lever system can not be made to respond to. As your specifications are drawn this condition is not recognized, and we presume that possibly your committee has not given the same consideration, and we submit it, based on our experience in the trade.

STATEMENT BY COMMITTEE.

The committee is not able to conceive how it is possible to take cognizance of the situation presented in this objection. The manu-

facturer admits that the regulation is a proper one as a rule, and by this admission we are forced to believe that it is a proper one for all cases where the scale is tested by a weights and measures official. If a scale were designed and built to weigh incorrectly for some special purpose, even though such purpose were not a fraudulent one, the specifications and tolerances surely could not make an exception of it if it were to be tested and sealed by an official. And the case in point, while not exactly similar, appears to fall under the same general rule.

Even were the proposed discrimination correct in principle, the administrative difficulties in enforcing the difference in the tolerances and specifications would be so great that it seems that it would be almost impossible to make it a practical working proposition. Therefore it is the opinion of the committee that the regulations at present adopted must stand and be applied alike to all apparatus included in the heading "Application of specifications" contained in the tolerances and specifications adopted by the conference.

COUNTER SCALES—SPECIFICATION NO. 8.

TEXT.

Scales of such construction that any weights which are not visible can be added so as to affect the indications of the scale, shall be equipped with a device which will plainly indicate on the customer's side of the scale when the weight or weights have been added and the value which it or they represent on the scale.

COMMENT OF MANUFACTURER.

We are not quite clear what this refers to, but should judge a double-face full-capacity beam for a wagon scale which can be read from either side is the meaning of this paragraph.

STATEMENT OF COMMITTEE.

The specification in question refers only to counter scales and the application of it to wagon scales is in error. Also, moving poises or beams, counterpoise weights placed on an open counterpoise, etc., are not within the terms of the specification, since weights when so added and used are "visible." On some counter scales, however, weights are so inclosed or incased that they can be attached to the moving parts of the scales while out of sight, and it is to such weights as these that the specification applies.

COUNTER BALANCES AND SCALES—SPECIFICATION NO. 10.

TEXT.

All scales shall be so constructed that when a weight whose body has approximately equal diameter and height and which represents one-half of the capacity of the scale, is shifted in any direction on the weight plate or on the commodity plate, pan, or scoop, to a point one-half the distance between the center and the edge of the weight plate or the commodity plate, pan, or scoop, the additional resulting error in the weight indication, due to this cause alone, shall not exceed the tolerance allowed on a part of a scale not requiring the employment of removable weights, at the load in question: Provided, however, that in this test, the edge of the weight shall not be made to project over the edge of the weight plate or the commodity plate, pan, or scoop.

COMMENT OF MANUFACTURER.

It seems to us this specification is not quite explicit in defining the location of the weight and would suggest the following: When a weight whose body

has approximately equal diameter and height and which represents one-half of the capacity of the scale is shifted on the weight plate or commodity plate or scoop to a point where the center of the weight corresponds approximately with one-half the distance between the center and edge of the weight plate, or the commodity plate or scoop—provided, however, that in this test the weight shall not project over the edge of the weight plate or commodity plate or scoop—the error should not exceed the allowable error for the scale at its full capacity. In making tests of trip scales the weight on the opposite plate, pan, or scoop is to be located approximately in the center.

STATEMENT OF COMMITTEE.

It does not appear to the committee that the alternative wording suggested is preferable to the original.

COUNTER BALANCES AND SCALES—SPECIFICATION NO. 12.

TEXT.

All counter scales shall be in level.

COMMENT OF MANUFACTURER.

Are not quite clear as to the meaning.

STATEMENT BY COMMITTEE.

This specification has two applications, only one of which is of interest to manufacturers. First, it requires that a scale shall be so constructed that when it is set upon a level surface it will comply with the specifications and tolerances. Second, it requires that the user of the scale shall keep it in a level condition so that it will remain accurate while it is being used.

COUNTER BALANCES AND SCALES—TABLE OF SENSIBILITY RECIPROCALS.

COMMENTS OF MANUFACTURERS.

Tabulation of maximum sensibility reciprocal has no denomination indicated. Presume these tolerances are in ounces.

* * * While the table given * * * is not expressed in values—that is, whether the same are pounds or ounces—we assume that this table is made on the basis of proportion of capacity to maximum sensibility reciprocal allowed.

STATEMENT OF COMMITTEE.

The omission of the column headings was a typographical error. The assumption that the first column should be headed "pounds," and the second column "ounces," is correct. The assumption that the table is made on the basis of a proportion is not correct.

COUNTER BALANCES AND SCALES—TOLERANCES.

TEXT.

Except on the special tests described above, the tolerances to be allowed in excess or deficiency on counter scales shall not be greater than the following values: *Provided, however*, That the manufacturers' tolerances or the tolerances to be allowed on new counter scales, shall not be greater than one-half of the values given: * * *.

COMMENT OF MANUFACTURER.

Specifications on tolerances for manufacturers, or on new scales, might be made more definite. When does a "new" scale pass from one grade of tolerance to another? From a manufacturer's standpoint, the moment a scale is unboxed, set up, and used, it becomes subject to the full tolerance.

STATEMENT OF COMMITTEE.

In those jurisdictions where it is required that apparatus be sealed before sale, in the factory of the manufacturer of, or dealer in, such apparatus, the meaning of "new" apparatus is entirely without ambiguity, since if the apparatus is to be sold as "new" apparatus, it is always to be so considered when tested under the above-mentioned conditions. In jurisdictions which require that apparatus be sealed before it is put into use, all apparatus purchased as "new" apparatus, which is sealed for the first time and in accordance with the requirements of the law, is "new" apparatus.

It is equally clear that where apparatus is sealed for the second time in the store of the merchant such apparatus is no longer "new" apparatus.

One case still remains, where a merchant purchases apparatus as "new" apparatus and puts it into use and uses it for some time before the inspection by the official is made. In cases of this kind the judgment of the official must enter as the determining factor. The tolerances for old apparatus have been increased on the assumption that apparatus subjected to usage will necessarily deteriorate. If apparatus, being "new" when purchased, has been used so short a time, for instance a week, that it necessarily can not, or should not, have deteriorated any measurable extent, then the official will be justified in treating the apparatus as "new" apparatus. If, on the contrary, apparatus has been in use a sufficient length of time, for instance several months or more, for some deterioration to have occurred, then it must be treated as being no longer "new" apparatus within the meaning of the tolerances.

"Rebuilt" apparatus should be treated as "new" apparatus. (For the purpose of this requirement "rebuilt" apparatus may be defined as that which has been returned to the factory of the original manufacturer for thorough repair or which has become the property of some other manufacturer and has been repaired and resold by him.)

"Repaired" apparatus should be treated as other than "new" apparatus. ("Repaired" apparatus includes that which has been mended or fixed up, other than in the manner described under "rebuilt" above.)

COMPUTING SCALES—SPECIFICATION NO. 3.

TEXT.

The value graduations on all computing charts shall not exceed one cent on all prices per pound up to and including 30 cents. At any higher price per pound the value graduations shall not exceed two cents. Provided, however that nothing in the above shall be construed to prevent the placing of a special value graduation to represent each five cent interval. These special graduations may take the form of dots, staggered graduations or similar forms; they shall be so placed that their meaning and value may be clearly understood, but they shall not be placed in the space between the regular graduations.

COMMENT OF MANUFACTURER.

This is illogical, impractical, unnecessary, and unfair. It will be readily seen that if specification No. 3 as drafted were enforced, it would limit the utility of a computing scale and would discriminate in favor of the old-style pound and ounce scale. The clause in its very wording admits that it is illogical, for it requires 2-cent graduations, and then carries a further provision

that every 5 cents be indicated. It is very confusing to have the two forms of graduations. While there is a diversity of opinion as to whether pennies, 2 pennies, or 5 pennies should be shown on a computing chart, an investigation of the practicability of charts, the way in which the charts are used, the commodities sold over the scales in which the charts are used, etc., will quickly settle the vexing problem. The 2-cent chart, from a merchant's standpoint, is a nuisance. The problem is one susceptible of practical solution, and we urge that the committee investigate for themselves and follow no one's beliefs or ideas.

The laws in many States give to sealers of weights and measures specific authority to inspect the value computations on computing scales. These laws were passed when there were numerous scales in existence and use in those States with minimum graduations of 2 and 5 cents. The law did not anticipate nor require minimum graduations of values, but the law does require that every value graduation shall be accurately and correctly placed.

If the regulation in question were enforced, what would the sealer do in those cases in which the price per pound at which the commodity is sold was not upon a computing scale at all? What the law seeks to avoid is that any of these instruments shall arbitrarily suggest and indicate to the user a wrong value, but to attempt to say to the user of these devices that he can not use a particular one, in which all value indications are true and correct, because it has not so many of such value graduations as some other device manufactured on a different plan, would be intolerable and against the spirit of our laws.

It will be readily seen that unless some limitation can be suggested covering the ordinary pound and ounce scale, so that it will be under the same restrictions as those mentioned in the proposed specifications, the specification in question could not be enforced, being unwarranted discrimination under the law and therefore unconstitutional.

The fact that there is a difference of opinion between weights and measures officials, men who have given the subject considerable thought, as to the proper method of graduating a computing chart indicates that the subject is not now in such condition as to be susceptible to clear regulation. In Canada they permit 5-cent graduations at the higher prices per pound. In certain States, notably Minnesota, the regulations permit of 5-cent graduations at the higher prices per pound. In New York City every cent is required, regardless of the fact that at the higher prices per pound the marks are so close together that it makes impossible a correct reading of values. Under the 1913 proposed regulations 2-cent graduations throughout the entire chart were proper. If the committee's recommendation in 1913 was wrong, may not their action in 1914 be also wrong, especially when many men who have given as much if not more thought to the subject than the committee proposing the regulation, and who have had experience in the field testing all kind of scales, think otherwise?

Aside from all other objection to the specification quoted above, it is exceedingly objectionable when read in connection with clauses 7 and 9, and makes impossible the building of certain scales and materially limits the utility of a computing scale.

STATEMENT OF COMMITTEE.

The provision is said to be "illogical, for it requires 2-cent graduations and then carries a further provision that every 5 cents be indicated. It is very confusing to have two forms of graduations." The manufacturer has very evidently misread the specification. For first, the maker may choose between 1-cent and 2-cent graduations at all prices above 30 cents, and thus the 2-cent graduation can not be said to be "required." And second, the maker may or may not use the extra 5-cent graduation, as he sees fit, and therefore there is no compulsion that this "be indicated." If the manufacturer actually believes that the two forms of graduations are "confusing," then he is not required to use them. The committee believes that inasmuch as "5 cents' worth," "a quarter's worth," etc., are still often called for, and further, since the computing scale is said to have the advantage of properly weighing out the amount

corresponding to a specified price, that the extra 5-cent mark is of very great assistance to the user of the scale. Yet to allow 5-cent marks exclusively or generally, without others, on account of this occasional usefulness, when at all other points 1-cent or 2-cent marks result in a much more accurate computation of price, would be a very great mistake. Finally, the requirement that the 5-cent mark be not placed "in the space between the regular graduations" appears to us to dispose completely of the contention that confusion will be caused thereby.

The second contention that laws were passed in many States giving sealers the right to inspect the value computations on computing scales and that at that time there were many scales in existence and use in those States with minimum graduations of 2 and 5 cents and that the laws did not anticipate nor require minimum graduations of values, is not to our mind at all conclusive of the intention of the legislators. We might as well presume that once the right to inspect computing charts was given to the weights and measures officials, it was supposed that by regulations he would require that accurate charts be made, and enforce the use of such charts. If the 5-cent chart can not be accurately used, and the committee is of this opinion, then it is the duty of the official to whom the power to inspect charts has been given, to prohibit their use. The law does not, perhaps, give the official actual instructions as to what charts to condemn, since the legislators can not, with any degree of efficiency, write specifications into the law itself, but must of necessity leave these to the officials enforcing the law, only requiring that these be reasonable and justifiable and alike applicable to all charts.

The third contention expressed in the form of the question, "What would the sealer do in those cases in which the price per pound at which the commodity is sold was not upon the computing chart at all?"—is easily answered by stating that this is not of any interest whatever to the official. If any certain price per pound is not given upon the scale, it is sufficiently evident that the scale can not be used directly to compute the total price at this unit price per pound. On the contrary, when this unit price is given upon the instrument, it holds out that one will be able to compute total prices at this price per pound accurately by the use of the instrument itself and any regulation fairly tending to make it possible to do this and to eliminate charts which make it impossible or even very difficult to do this, is believed to be valid.

In answer to the argument that some similar limitation must be suggested covering the ordinary pound and ounce scale, it may be said that the specifications specifying the minimum play of the beam and the maximum sensibility reciprocal in the case of counter scales are analogous to the limitations imposed here. This is more completely explained in the statement hereinafter included under specification No. 8. There can of necessity be no exact equivalent in terms, since the ordinary counter scale does not profess to compute total prices of various amounts at certain unit prices, and the computing scale is sold upon this direct representation.

The contention that there is a difference of opinion between weights and measures officials as to the proper method of graduating a computing chart does not indicate that "the subject is not now in such condition as to be susceptible of clear regulation," since differ-

ences of opinion are always bound to exist. This very difference of opinion as expressed by various present regulations renders it imperative that a common ground upon which all can stand be prescribed, in order that a uniformity of regulation be secured. This, we believe, has been found since this specification has been adopted by the conference.

It is, then, necessary to limit the value of the smallest intervals in order that accurate computed values may be obtained, and it is equally necessary to put limitations on the minimum width of the graduation lines and on the minimum clear space between them, since otherwise, in order to meet this requirement, the manufacturers might make the graduation lines so fine and the distance between them so small that they would not be readable, and the very purpose of the specification would thereby be defeated. That this condition would be almost certain to obtain is exemplified by this very argument in the sentence which reads, "In New York City every cent is required, regardless of the fact that at the higher prices per pound the marks are so close together that it makes impossible a correct reading of values." Therefore specifications 7 and 9 are very necessary ones in this connection if proper charts are to be obtained.

COMPUTING SCALES—SPECIFICATION NO. 5.

TEXT.

All computing scales shall be equipped with weight indicators on both the dealer's and customer's sides and their width shall not exceed 0.015 inch. The distance between the chart and the weight indicators shall in no case exceed 0.06 inch. Both indicators shall reach to the graduated divisions and shall indicate clearly and correctly.

COMMENT OF MANUFACTURER.

This regulation apparently was based on an inspection of one type of computing scale and should therefore not be published nor promulgated for general enforcement; 0.015 of an inch may be a proper width for a value indicator such as is used on the barrel-type computing scale, but there are other types of computing scales on which the indicator may be half an inch or even an inch wide and not be at all objectionable. The same statement is true regarding the distance that the indicator must be from the chart. There are certain kinds of indicators which if placed one-half inch from the chart would give just as accurate an indication as if placed 0.06 of an inch from the chart. To compel all computing scales, no matter on what plan manufactured, to come within the narrow limits of the regulations as proposed would work a hardship which would scarcely be tolerated in law. Further, a very obvious objection to the proposed specification is that it requires more of computing scales than it does of other counter scales, and there can be no warrant in law for this.

STATEMENT OF COMMITTEE.

It is claimed that this specification was based on an inspection of one type of computing scale and should therefore not be published nor promulgated for general enforcement. This contention is also made from time to time hereinafter, and it may be answered in this place for all cases. This statement is not in accordance with the facts. The committee was widely acquainted with the various types of scales upon which regulations were promulgated and every specification was carefully considered from all angles in order that no injustice might be done.

The first objection is that the indicator may be one-half inch or more wide and not be at all objectionable. The committee considered this matter and decided that the use of an indicator employing a reading edge, which is the construction evidently in the mind of the manufacturer, is not satisfactory, and for this reason a narrow indicator such as a thin wire or sharpened pointer should be used. A reading edge which covers over a considerable portion of the graduated surface under observation is not satisfactory, since it results in inaccuracy of readings, but this objection has no application in the case of one which leaves nearly all the graduated surface under observation exposed, which is the construction required by this specification.

The second objection is to the maximum distance allowed between the indicator and the chart. In making any reading of a point upon a chart or face by means of an indicator placed in front of the chart or face, whether the indicator is stationary and the chart or face revolves or the chart or face is stationary and the indicator passes over it, there will be some "parallax"; that is, a change of reading due to a change in the position of the observer's eye. On some scales the error occurs when the movement of the point of observation is in a vertical direction, on others in a horizontal direction, and on still others either of these movements will cause an error.

In all cases, however, the greater the distance between the indicator and the face or chart, the greater the "parallax," i. e., the greater the error of the reading of the point for a certain change of position. Since this introduces serious errors at times, it is important that the distance between the indicator and the chart or face be made as small as practicable, to the end that the error due to parallax be negligible or nearly so.

The decision as to what this distance should be is necessarily an arbitrary one, and must be determined by a consideration of the difficulties of manufacture and the importance of probable errors. The 0.06 inch required was fixed with both these points in mind, and the figure given is believed to be a perfectly just and fair one to all concerned.

COMPUTING SCALES—SPECIFICATION NO. 6.

TEXT.

All computing scales shall be equipped with a value indicator on the dealer's side, and its width shall not exceed 0.015 inch. The distance between the chart and the value indicator shall in no case exceed 0.06 inch. This indicator shall reach to each value graduation and shall indicate clearly and correctly.

COMMENT OF MANUFACTURER.

The same remarks apply * * *. [As to specification No. 5 above.]

STATEMENT OF COMMITTEE.

The same statement applies as to specification No. 5 above.

COMPUTING SCALES—SPECIFICATION NO. 7.[1]

TEXT.

The weight graduations and the value graduations shall be clear and distinct, but in no case shall their width be less than 0.008 inch.

---

[1] See also discussion on p. 153.

COMMENT OF MANUFACTURER.

This seems to limit the size of value graduations in the wrong direction. The wider the graduation the more room there is for fraud on the part of the user, as more latitude is given for the passing of the value indicator over the space occupied by such graduation, for the larger such value or weight graduation so much more will be the play between one edge of it and the other, and hence the greater the opportunity for error. The finer such value and weight graduations can be made and be clearly read, so much better and more accurate is the device and so much less the variation.

STATEMENT OF COMMITTEE.

There is a very real need for the limitation of the value graduations in this way. For otherwise in endeavoring to crowd a large number of graduations into a limited space, the lines might be made so fine as to be very difficult to read. The committee has considered that the limitation in the other direction is obtained by specification No. 9, which requires a certain clear interval between graduation lines, since it appeared that in order to get a satisfactory number of graduations, especially value graduations at the higher prices per pound, in a certain space, the width of the lines would be held within proper bounds. Moreover, it appeared that the apparent coarseness of very heavy lines upon a scale which purported to be an accurate weighing device would preclude its sale, and therefore it manufacture would not be advisable. The fineness of the lines, on the contrary, although making the scale very difficult to read, might well be unscrupulously used as an indication of the sensitiveness and accuracy of the scale. Therefore, it was considered that a positive limitation was required in one direction while expediency would limit it in the other. However, the committee sees no valid objection to placing a maximum limit upon the thickness of the lines and considers that there might be some advantage in so doing.

As to the value prescribed here, after thorough investigation as to the readability of lines of various thicknesses, the committee arrived at the conclusion that 0.008 inch correctly represented the lower limit which should be allowed, and the specification was written accordingly.

COMPUTING SCALES—SPECIFICATION NO. 8.

TEXT.

The maximum value of the weight graduations on computing scales used in the sale of foodstuffs at retail shall be one ounce.

COMMENT OF MANUFACTURER.

This discriminates against computing scales. There is nothing in the proposed specifications which imposes a like limitation upon other counter scales, and if such a specification should receive the sanction of the weights and measures department of any State it could not be enforced unless a like limitation was imposed upon other counter scales used in the purchase and sale of like commodities.

STATEMENT OF COMMITTEE.

It is claimed that this specification requiring that the maximum value of the graduation on computing scales used in the sale of foodstuffs at retail be 1 ounce "discriminates against computing scales." This is not a correct statement. Specification No. 4, under the head-

ing "Spring scales," and specification No. 11, under the heading "Counter balances and scales," applies exactly the same requirement to spring scales and to counter scales having a reading face. In the event that a counter scale does not have a reading face or dial an analogous requirement is enforced for scales of this type by providing a minimum drop or fall in specification No. 7, or for a minimum angular play or minimum swing between stops or over a face or arc in specification No. 8, taken in connection with the specified sensibility reciprocal which is given under that heading.

Of necessity the regulation can not be exactly similar, since there is no exactly similar part which can be regulated. The nearest approach which can be made is to require that an amount which is readable upon a scale which has a face or dial shall also be readable when some other form of indicating mechanism is employed. If this requirement is fulfilled then certainly no discrimination can be urged by the manufacturer of automatic scales.

On automatic scales used in the sale of foodstuffs at retail the maximum value of the graduation shall be 1 ounce and the minimum space on the dial represented by the minimum weight graduation shall be 0.048 inch (0.04 inch, the minimum clear space between graduations plus 0.008 inch, the minimum width of the graduation line).

It follows that the minimum movement required for one-half ounce is 0.024 inch and for one-quarter ounce is 0.012 inch.

We may take several representative cases of counter scales of various capacities and compare the movement of the beam required at the indicating point for the weights mentioned above.

For an even-arm scale having a capacity of 4 pounds a weight of one-quarter ounce (the maximum allowable sensibility reciprocal) shall cause a minimum movement of the main lever of 0.175 inch (half the minimum total drop or fall of 0.35 inch required by specification No. 6). This is more than 14 times the movement required of automatic scales, computed above.

In the same way for an even-arm scale having a capacity of 12 pounds, a weight of one-half ounce shall cause a minimum movement of the main lever of 0.25 inch; and when the capacity is 30 pounds a weight of 1 ounce shall cause a movement of 0.5 inch. Both of these distances are more than ten times as great as the distance which the pointer must travel on a scale with a reading face or dial. It is proper that the distance should be greater in the case of an equal-arm scale of the usual type than in the case of a scale with a reading face or dial, since better reference points are established in the latter case, and the distances given in each case in the specifications under consideration appear to the committee, after due investigation, to be proper and equitable ones.

In the case of unequal-arm scales, such as are mentioned in specification No. 7, not provided with a trig-loop or graduated scale or arc for establishing the proper position of balance of the beam, the distance of travel of the end of the beam will in general be greater than in the case of equal-arm scales; and in the case of scales having a trig-loop or graduated scale or arc the distance will be somewhat less in a few cases, but nevertheless sufficient in view of the better reference point.

A study of the above figures will clearly indicate that any quantity readable on an automatic scale is also readable on a counter scale, and the claim that computing scales are discriminated against is quickly seen to be an unwarranted one.

COMPUTING SCALES—SPECIFICATION NO. 9.

TEXT.

The clear interval between the weight graduation marks on all computing scales shall not be less than 0.04 inch. The clear interval between the value graduation marks on all computing scales shall not be less than 0.02 inch. Provided, however, that the latter requirement shall not be construed to apply to the special value graduation denoting the five-cent interval, mentioned heretofore.

COMMENT OF MANUFACTURER.

This is discriminating and unfair and was evidently aimed at what are known as fan-shaped computing scales in favor of cylinder scales. The enforcement of the proposed specification would result in the condemnation and confiscation of certain fan-shaped computing scales, upon which every weight and value indication is absolutely accurate, and which scales are as accurate and as susceptible of correct reading as any computing scale on the market, and for many uses superior to other types. This regulation seems particularly unnecessary in view of proposed regulation No. 3. There is no sound argument for this difference of interval in the weight and value graduations.

This is a partisan piece of legislation, which, it is respectfully submitted, should not receive the sanction of the officials of weights and measures.

STATEMENT OF COMMITTEE.

This specification applies to every computing scale, and affects each type in exactly the same way, whether cylindrical, fan-shaped, or otherwise. The committee fails to understand, therefore, how such a regulation can be said to be "discriminating and unfair and aimed at what are known as fan-shaped computing scales in favor of cylinder scales." The argument that this specification would result in the condemnation of scales now in use is now disposed of, since this requirement has been placed in the nonretroactive class and merely forbids the further manufacture of these scales.

This regulation is particularly necessary in view of specification No. 3, as has been pointed out in the last paragraph of the statement made under that specification.

The committee believes that graduations should be at least 0.04 inch apart in order that they may be read with a fair degree of accuracy by the ordinary person. Therefore, in all cases where the graduations are intended for or must be used by the purchaser the 0.04 inch spacing must be rigidly adhered to. The committee feels, however, that the user of a computing scale might find it possible to read graduations 0.02 inch apart with a fair degree of accuracy, but only because of the experience which he acquires from the constant use of the scale. This spacing is therefore allowed for value graduations.

Furthermore, the committee believes that there is another "argument for the difference between the weight and value graduations." Since no higher than 2-cent graduations are allowed, it will not be necessary to subdivide the spaces between the graduations with the eye into finer subdivisions than halves to obtain values correct to

within 1 cent, our smallest coin. Therefore these graduations may be permitted to be closer together than the weight graduations, since the spaces between the latter must sometimes be subdivided by the eye into finer subdivisions than halves to obtain an accuracy to the nearest cent.

COMPUTING SCALES—SPECIFICATION NO. 14.

TEXT.

All devices intended to increase the capacity of computing scales by the addition of an added weight or weights shall operate properly irrespective of the speed with which they are manipulated.

COMMENT OF MANUFACTURER.

This is aimed expressly at a feature of the ——— scale, so well covered by letters patent of the United States that no other company has ever dared to imitate it. The scale in question is a particularly popular one, extremely useful when a wide range of prices is necessary. Naturally competitors and others friendly to such competition, not being able to manufacture or use the device without the consent of the ——— Co., because of such patent, would seek to hamper its use. There is no good reason why this device should be singled out more than any other device and made the subject of a special regulation, which might, in the hands of a sealer, be misunderstood and abused, because there is a speed beyond which no device can operate, and the manipulation to which this special feature is subjected is no more than the manipulation to which any scale might be subjected by a user intending to defraud his customers. The chance of perpetrating fraud with this scale is most remote. There are many inherent weaknesses in scales whch have been overlooked and ignored by the committee in framing the regulations, and why they should pick out this one particular point is beyond our comprehension.

STATEMENT OF COMMITTEE.

When a device, which affects the indications of a scale, can be operated in what appears to be a reasonable manner, and will then cause seriously incorrect results in the indications, it becomes necessary to require that it be so constructed that the weight indications will be correct. The specification will only affect any device if such device will not operate at varying speeds of manipulation. Therefore, the tacit admission in the manufacturer's comment above, that the device, which the manufacturer has in mind, may be manipulated to perpetrate fraud is strongly indicative of the necessity of the specification. The committee believes that any device, the speed of operation of which will affect the indications of the scale, is likely not only to facilitate fraud, but also to give incorrect results unknown to the user, and that such a device, therefore, should be prohibited.

The committee calls attention to specification No. 3 under the heading "Measuring pumps," which contains a similar requirement in the words: "The amount delivered shall not vary by more than the tolerance allowed, irrespective of the speed with which the pump is operated.

Lastly, the statement that "many inherent weaknesses in scales * * * have been overlooked and ignored by the committee," is not sufficiently specific to make it possible for the committee to take under advisement the defects that the manufacturer may have had in mind. It is to be regretted that he was not more definite, as the

committee has earnestly endeavored to draft specifications that would eliminate weaknesses and defects in apparatus, and manufacturers would render a great service by pointing out such defects as may have come to their attention.

PREVIOUS LACK OF CLASSIFICATION.

COMMENT OF MANUFACTURER.

The committee, in its recommendations, does not make it clear which of these regulations, if any, should be retroactive. No regulations other than those which apply specifically to the honesty of the scale should be retroactive. Scales made years ago, prior to the existence of the specifications, which scales weigh accurately to-day and compute accurately, should not be subjected to regulations regarding the graduations on the chart. If the device which the dealer is using is actually dishonest and inaccurate, then under the general police powers inherent in the State its use ought to be prohibited.

STATEMENT BY COMMITTEE.

It was never the intention—either of the committee, in framing the specifications, or the conference in adopting them—that all of them should be retroactive in their effect, but the decision in specific cases was left to the administrative officers enforcing the specifications in his jurisdiction. Also before the issuance of the advance report the committee had decided that in order to promote uniformity in the enforcement of the specifications in the various jurisdictions in which they were adopted, the list of nonretroactive specifications should be included in the specifications themselves. Only lack of time to consider each specification in detail prevented the issuance of this list in the advance report. The matter was taken care of, however, in the amendments proposed by the committee at the conference and the suggested list was accepted by the conference. The above objection was disposed of by this action, since among those specifications which were made nonretroactive were ones referring to the graduations on the chart.

APPENDIX 3.—MODEL STATE LAW ON WEIGHTS AND MEASURES.[1]

The model law is given below in three forms. The following is a brief description of these forms and of the local conditions in which each will be found to be peculiarly applicable:

FORM NO. 1.

This form provides that the entire weights and measures inspection system shall be in the hands of a State department and that the weights and measures laws shall be wholly enforced by men in the service of the State.

This form is intended primarily for States having a comparatively small population per unit of area and few large centers of population; and, secondarily, for those States in which it is believed that such a law can be most competently enforced by a centralization of power.

FORM NO 2.

This form provides that the State shall take entire charge of the enforcement of the law in those jurisdictions in which the population per unit of area is so small that local authority can not enforce the provisions with the highest efficiency, and that in those jurisdictions where the population is large enough to justify it a local inspection service under the supervisory authority of the State department shall take up the enforcement of the provisions of the law.

This form is primarily intended for those States having part of their territory thickly settled and other parts only thinly settled.

FORM NO. 3.

This is the original form of the model law and provides for the enforcement of the provisions by local inspectors in each city and each county, all under the general supervisory control of a State department of weights and measures.

This form is intended for those States having a large population per unit of area and none or but few sections which are sparsely settled.

TEXT, FORM NO. 1.

SECTION 1. The weights and measures received from the United States under joint resolutions of Congress approved June 14, 1836, and July 27, 1866, and such new weights and measures as shall be received from the United States as standard weights and measures in addition thereto or in renewal thereof, and such as shall be supplied by the State in conformity therewith and certified by

[1] This model law was drafted by the National Bureau of Standards and indorsed by the Eighth National Conference on Weights and Measures, and amended by the tenth conference.

the National Bureau of Standards shall be the State standards of weights and measures.

SEC. 2. In addition to the State standards of weights and measures, provided for above, there shall be supplied by the State at least one complete set of copies of these, to be kept at all times in the office of the State superintendent (commissioner) and to be known as office standards; and such other weights, measures, and apparatus as may be found necessary to carry out the provisions of this act, to be known as working standards. Such weights, measures, and apparatus shall be verified by the State superintendent (commissioner), or his deputy, or inspectors, at his direction, upon their initial receipt and at least once in each year thereafter, the office standards by direct comparison with the State standards, the working standards by comparison with the office standards. When found accurate upon these tests the office and working standards shall be sealed by stamping on them the letter "—" and the last two figures of the year with seals which the State superintendent (commissioner) shall have and keep for that purpose. The office standards shall be used in making all comparisons of weights, measures, and weighing or measuring devices submitted for test in the office of the superintendent (commissioner) and the State standards shall be used only in verifying the office standards and for scientific purposes.

SEC. 3. There shall be a State superintendent (commissioner) of weights and measures, who shall be appointed by the governor, by and with the advice and consent of the senate. Such superintendent (commissioner) shall be appointed for a term of five years, and shall receive a salary of $——— a year. There shall be a deputy superintendent (commissioner) of weights and measures and inspectors of weights and measures, the deputy to be appointed by the superintendent (commissioner) of weights and measures and to hold office during the superintendent's (commissioner's) term of office, the inspectors to be appointed from an eligible list prepared by the civil service board and under the rules of said board. The superintendent (commissioner) of weights and measures shall be allowed for salaries for the deputy superintendent (commissioner) of weights and measures, inspectors of weights and measures, clerical services, traveling and contingent expenses for himself, his deputy, and inspectors such sums as shall be appropriated by the legislature.

SEC. 4. The State superintendent (commissioner) of weights and measures shall forthwith, on his appointment, give a bond in the penal sum of $5,000, with sureties, to be approved by the secretary of state (attorney general) for the faithful performance of the duties of his office and for the safe-keeping of the standards intrusted to his care and for the surrender thereof immediately to his successor in office or to the person appointed by the governor to receive them. The deputy superintendent (commissioner) of weights and measures and each inspector of weights and measures shall forthwith upon his appointment give a bond in the penal sum of $1,000, with sureties, to be approved by the secretary of state (attorney general), for the faithful performance of the duties of his office and for the safe-keeping of any apparatus intrusted to his care.

SEC. 5. The superintendent (commissioner) of weights and measures shall take charge of the standards adopted by this act as the standards of the State, and cause them to be kept in a fireproof building belonging to the State (or in a safe and suitable place in the office of the superintendent (commissioner)), from which they shall not be removed except for repairs or for certification, and he shall take all other necessary precautions for their safe-keeping. He shall maintain the State standards in good order and shall submit them at least once in ten years to the National Bureau of Standards for certification. He shall keep a complete record of the standards, balances, and other apparatus belonging to the State and take a receipt for same from his successor in office. He shall annually, on the first day of ———, make to the governor a report of all work done by his office.

SEC. 6. The State superintendent (commissioner) of weights and measures shall have and keep a general supervision of the weights, measures, and weighing or measuring devices, offered for sale, sold, or in use in the State. He or his deputy, or inspectors at his direction, shall, upon the written request of any citizen, firm, corporation, or educational institution in the State, test or calibrate weights, measures, and weighing or measuring devices used as standards in the State. He, or his deputy, or inspectors, at his direction, shall at least once annually test all scales, weights, and measures used in checking the receipts or disbursements of supplies in every institution for the maintenance of which

moneys are appropriated by the legislature, and he shall report in writing his findings to the supervisory board and to the executive officer of the institution concerned, and, at the request of such board, or executive officer, the superintendent (commissioner) of weights and measures shall appoint in writing one or more employees then in the actual service of the institution who shall act as special deputies for the purpose of checking the receipts or disbursements of supplies.

SEC. 7. When not otherwise provided by law the State superintendent (commissioner) shall have the power, and it shall be his duty to inspect, test, try, and ascertain if they are correct, all weights, measures, and weighing or measuring devices kept, offered, or exposed for sale, sold, or used or employed by any proprietor, agent, lessee, or employee in proving the size, quantity, extent, area, or measurement of quantities, things, produce, or articles for distribution or consumption purchased or offered or submitted by such person or persons for sale, hire, or award, and he shall have the power to and shall from time to time weigh or measure and inspect packages or amounts of commodities of whatsoever kind kept for the purpose of sale, offered or exposed for sale, or sold or in the process of delivery in order to determine whether the same contain the amounts represented, and whether they be offered for sale or sold in a manner in accordance with law. He shall at least twice each year and as much oftener as he may deem necessary see that all weights, measures, weighing or measuring devices used are correct. He may for the purpose above mentioned, and in the general performance of his official duties, enter and go into or upon, and without formal warrant, any stand, place, building, or premises, or stop any vender, peddler, junk dealer, coal wagon, ice wagon, delivery wagon, or any person whatsoever, and require him, if necessary, to proceed to some place which the State superintendent (commissioner) may specify, for the purpose of making the proper tests. Whenever the State superintendent (commissioner) finds a violation of the statutes relating to weights and measures, he shall cause the violator to be prosecuted.

SEC. 8. Whenever the State superintendent (commissioner) compares weights, measures, or weighing or measuring devices and finds that they correspond or causes them to correspond with the standards in his possession, he shall seal or mark such weights, measures, or weighing or measuring devices with appropriate devices.

SEC. 9. The State superintendent (commissioner) shall condemn and seize and may destroy incorrect weights, measures, or weighing or measuring devices which, in his best judgment, are not susceptible of satisfactory repair; but such as are incorrect and yet, in his best judgment, may be repaired, he shall mark or tag as "Condemned for repairs," The owners or users of any weights, measures, or weighing or measuring devices of which such disposition is made, shall have the same repaired and corrected within ten days, and they may neither use nor dispose of the same in any way, but shall hold the same at the disposal of the superintendent (commissioner). Any weights, measures, or weighing or measuring devices which have been "condemned for repairs," and have not been repaired as required above, shall be confiscated by the superintendent (commissioner).

SEC. 10. The powers and duties given to and imposed on the State superintendent (commissioner) of weights and measures by sections 7, 8, and 9 of this act are hereby given to and imposed upon his deputy and inspectors also, when acting under his instructions and at his direction.

SEC. 11. The superintendent (commissioner) of weights and measures, his deputy and inspectors, are hereby made special policemen, and are authorized and empowered to arrest, without formal warrant, any violator of the statutes in relation to weights and measures, and to seize for use as evidence, without formal warrant, any false or unsealed weight, measure, or weighing or measuring device or package or amounts of commodities found to be used, retained, or offered or exposed for sale or sold in violation of law.

SEC. 12. Any person who shall hinder or obstruct in any way the superintendent (commissioner) of weights and measures, his deputy, or inspectors, in the performance of his official duties shall be guilty of a misdemeanor, and upon conviction thereof in any court of competent jurisdiction shall be punished by a fine of not less than $20 or more than $200, or by imprisonment in the county jail for not more than three months, or by both such fine and imprisonment.

SEC. 13. Any person who shall impersonate in any way the superintendent (commissioner) of weights and measures, his deputy, or inspectors, by the use of his seal or counterfeit of his seal, or otherwise, shall be guilty of a mis-

demeanor, and, upon conviction thereof in any court of competent jurisdiction, shall be punished by a fine of not less than $100 nor more than $500, or by imprisonment for not more than one year, or by both such fine and imprisonment.

SEC. 13a. It shall be unlawful to sell, except for immediate consumption on the premises, liquid commodities in any other manner than by weight or liquid measure, or commodities not liquid in any other manner than by measure of length, by weight, or by numerical count, unless otherwise agreed in writing by the mutual consent of the buyer and seller: *Provided, however,* That nothing in this section shall be construed to prevent the sale of fruits, vegetables, and other dry commodities in the standard barrel provided for in section 20; or of berries and small fruits in boxes as provided for in section 21; or of vegetables or fruits usually sold by the head or bunch, in this manner: *Provided further,* That nothing in this section shall be construed to apply to foodstuffs put up in original packages.

For the purposes of this section the term "original package" shall be construed to include a commodity in a package, carton, case, can, barrel, bottle, box, phial, or other receptacle, or in coverings or wrappings of any kind, put up by the manufacturer, which may be labeled, branded, or stenciled, or otherwise marked, or which may be suited for labeling, branding, or stenciling, or marking otherwise, making one complete package of the commodity. The words "original package" shall be construed to include both the wholesale and the retail package.

For the purposes of this section the term "commodities not liquid" shall be construed to include goods, wares, and merchandise which are not in liquid form and which have heretofore been sold by measure of length, by weight, by measures of capacity, or by numerical count, or which are susceptible of sale in any of these ways.

SEC. 14. It shall be unlawful to sell or offer to sell any coal, coke, or charcoal in any other manner than by weight. It shall be unlawful for any person to deliver any coal, coke, or charcoal without each such delivery being accompanied by a delivery ticket and a duplicate thereof, on each of which shall be in ink or other indelible substance, distinctly expressed in pounds, the gross weight of the load, the tare of the delivery vehicle, and the quantity or quantities of coal, coke, or charcoal contained in the vehicle used in such deliveries, with the name of the purchaser thereof, and the name of the dealer from whom purchased. One of these tickets shall be surrendered to the State superintendent (commissioner), his deputy, or inspectors upon his demand for his inspection, and this ticket or a weight slip issued by him when he desires to retain the original shall be delivered to the said purchaser of said coal, coke, or charcoal, or his agent or representative at the time of the delivery of the fuel; and the other ticket shall be retained by the seller of the fuel. When the buyer carries away the purchase, a delivery ticket showing the actual number of pounds delivered to him must be given to him at the time the sale is made.

SEC. 15. It shall be unlawful to keep for the purpose of sale, offer or expose for sale, or sell any commodity in package form unless the net quantity of the contents be plainly and conspicuously marked on the outside of the package, in terms of weight, measure, or numerical count: *Provided, however,* That reasonable variations or tolerances shall be permitted, and that these reasonable variations or tolerances and also exemptions as to small packages shall be established by rules and regulations made by the superintendent (commissioner) of weights and measures: *And provided, further,* That this section shall not be construed to apply to those commodities in package form the manner of sale of which is specifically regulated by the provisions of other sections of this act.

The words "in package form" as used in this section shall be construed to include a commodity in a package, carton, case, can, box, barrel, bottle, phial, or other receptacle, or in coverings or wrappings of any kind, put up by the manufacturer, or when put up prior to the order of the commodity, by the vendor, which may be labeled, branded, or stenciled or otherwise marked, or which may be suitable for labeling, branding, or stenciling, or marking otherwise, making one complete package of the commodity. The words "in package form" shall be construed to include both the wholesale and retail package.

SEC. 16. It shall be unlawful to keep for the purpose of sale, offer or expose for sale, or sell any commodity composed in whole or in part of cotton, wool, linen, or silk, or any other textile material on a spool or similar holder, or in a container or band, or in a bolt or roll, or in a ball, coil, or skein, or in any

similar manner, unless the net amount of the commodity in terms of weight or measure shall be definitely, plainly, and conspicuously marked on the principal label, if there be such a label; otherwise on a wrapping, band, or tag attached thereto.

The words "spool or similar holder, container or band, bolt or roll, or ball, coil, or skein" shall be construed to include the spool or similar holder, container or band, bolt or roll, or ball, coil, or skein put up by the manufacturer; or when put up prior to the order of the commodity, by the vendor. It shall be held to include both the wholesale and the retail package.

SEC. 17. It shall be unlawful for any person to sell, or offer to sell any butter, or renovated or process butter, or oleomargarine in any other manner than by weight. It shall be unlawful for any person to put up, pack, or keep for the purpose of sale, offer or expose for sale, or sell any butter, or renovated or process butter, or oleomargarine in the form of prints, bricks, or rolls in any other than the following sizes, to wit: One-quarter pound, one-half pound, one pound, one and one-half pounds, or multiples of one pound. Each print, brick, or roll shall bear a definite, plain, and conspicuous statement of its true net weight, on the principal label, where there be such a label, otherwise on the outside wrapper thereof; such statement shall be in gothic type not less than one-quarter inch square.

The prints, bricks, or rolls referred to in this section shall be construed to include those prints, bricks, or rolls put up by the manufacturer or producer; or when put up prior to the order of the commodity, by the vendor.

SEC. 18. All bread kept for the purpose of sale, offered or exposed for sale, or sold shall be sold by weight. To each loaf of bread shall be attached a label plainly showing its correct weight and the firm name of the manufacturer thereof, the size of the label and type to be used to be specified by the State superintendent (commissioner) of weights and measures. It shall be unlawful for any person to make or keep for the purpose of sale, offer or expose for sale, or sell any bread other than such as shall be in accordance with the provisions of this section.

SEC. 19. Bottles used for the sale of milk or cream shall be of the capacity of one-half gallon, three pints, one quart, one pint, one-half pint, and one gill. Bottles or jars used for the sale of milk or cream shall have clearly blown or otherwise permanently marked in the side of the bottle the capacity of the bottle and the word "Sealed"; and in the side or bottom of the bottle the name, initials, or trade-mark of the manufacturer and a designating number, which designating number shall be different for each manufacturer and may be used in identifying the bottles. The designating number shall be furnished by the State superintendent (commissioner) of weights and measures upon application by the manufacturer, and upon the filing by the manufacturer of a bond in the sum of $1,000, with sureties, to be approved by the secretary of state (attorney general), conditioned upon his conformance with the requirements of this section. A record of the bonds furnished, and the designating numbers and to whom furnished, shall be kept in the office of the superintendent (commissioner) of weights and measures.

Any manufacturer who sells or offers to sell milk or cream bottles to be used in this State that do not comply as to size and markings with the provisions of this section shall suffer a penalty of $500, to be recovered by the attorney general in an action against the offender's bondsmen to be brought in the name of the people of the State. Any dealer who uses, for the purpose of selling milk or cream, jars or bottles purchased after this law takes effect that do not comply with the requirements of this section as to markings and capacity shall be deemed guilty of using a false or insufficient measure.

Sealers of weights and measures are not required to seal bottles or jars for milk or cream marked as in this section provided, but they shall have the power to and shall from time to time make tests on individual bottles used by the various firms in the territory over which they have jurisdiction in order to ascertain if the above provisions are being complied with, and they shall immediately report violations found to the State superintendent (commissioner) of weights and measures.

SEC. 20. The standard barrel for fruits, vegetables, and other dry commodities other than cranberries shall be of the following dimensions when measured without distention of its parts: Length of staves, twenty-eight and one-half inches; diameter of heads, seventeen and one-eighth inches; distance between heads, twenty-six inches; circumference of bulge, sixty-four inches, outside measurement; and the thickness of staves not greater than four-tenths of an inch: *Pro-*

vided, That any barrel of a different form having a capacity of seven thousand and fifty-six cubic inches shall be a standard barrel. The standard barrel for cranberries shall be of the following dimensions when measured without distention of its parts: Length of staves, twenty-eight and one-half inches; diameter of heads, sixteen and one-fourth inches; distance between heads, twenty-five and one-fourth inches; circumference of bulge, fifty-eight and one-half inches, outside measurement; and the thickness of staves not greater than four-tenths of an inch.

It shall be unlawful for any person to offer or expose for sale, sell, or ship any other barrels for fruits, vegetables, or other dry commodities, or to offer or expose for sale, sell, or ship any fruits, vegetables, or other dry commodities in other barrels than the standard barrels as defined in this section, or subdivisions thereof known as the third, half, or three-quarters barrel: *Provided, however*, That nothing in this section shall apply to barrels used in packing or shipping commodities sold exclusively by weight or numerical count; *and provided further*, That no barrel shall be deemed below standard within the meaning of this section when shipped to any foreign country and constructed according to the specifications or directions of the foreign purchaser if not constructed in conflict with the laws of the foreign country to which the same is intended to be shipped.

SEC. 21. It shall be unlawful to sell or offer to sell any berries or small fruits in any other manner than by weight, or in the containers described in this section. It shall be unlawful to procure or keep for the purpose of sale, offer or expose for sale, sell, or give away baskets or other open containers for berries or small fruits, holding one quart or less, or to procure or keep for the purpose of sale, offer or expose for sale, or sell berries or small fruits in baskets or other open containers, holding one quart or less, of any other than the following capacities, when level full: One quart, one pint, or one-half pint, standard dry measure.

SEC. 22. Whenever any commodity is sold on a basis of weight it shall be unlawful to employ any other weight in such sale than the net weight of the commodity; and all contracts concerning goods sold on a basis of weight shall be understood and construed accordingly. Whenever the weight of a commodity is mentioned in this act it shall be understood and construed to mean the net weight of the commodity.

SEC. 23. Any person who, by himself or by his servant or agent, or as the servant or agent of another person, shall offer or expose for sale, sell, use in the buying or selling of any commodity or thing or for hire or award, or retain in his possession a false weight or measure or weighing or measuring device, or any weight or measure or weighing or measuring device which has not been sealed by the State superintendent (commissioner), or his deputy or inspectors, at his direction, within one year; or shall dispose of any condemned weight, measure, or weighing or measuring device contrary to law, or remove any tag placed thereon by the State superintendent (commissioner), or his deputy or inspectors, at his direction; or who shall sell or offer or expose for sale less than the quantity he represents, or shall take or attempt to take more than the quantity he represents, when, as the buyer, he furnishes the weight, measure, or weighing or measuring device by means of which the amount of commodity is determined; or who shall keep for the purpose of sale, offer or expose for sale, or sell any commodity in a manner contrary to law; or who shall violate any provision of this act for which a specific penalty has not been provided, or who shall sell or offer for sale, or use or have in his possession for the purpose of selling or using any device or instrument to be used to or calculated to falsify any weight or measure; shall be guilty of a misdemeanor, and shall be punished by a fine of not less than $20 or more than $200, or by imprisonment for not more than three months, or by both such fine and imprisonment, upon a first conviction in any court of competent jurisdiction; and upon a second or subsequent conviction in any court of competent jurisdiction he shall be punished by a fine of not less than $50 or more than $500, or by imprisonment in the county jail for not more than one year, or by both such fine and imprisonment.

SEC. 24. The word "person" as used in this act shall be construed to import both the plural and singular, as the case demands, and shall include corporations, companies, societies, and associations.

The words "weights, measures, or (and) weighing or (and) measuring devices," as used in this act shall be construed to include all weights, scales, beams, measures of every kind, instruments and mechanical devices for weigh-

ing or measuring, and any appliances and accessories connected with any or all such instruments.

The words "sell" or "sale" as used in this act shall be construed to include barter and exchange.

TEXT, FORM NO. 2.

SECTION 1. The weights and measures received from the United States under joint resolutions of Congress approved June 14, 1836, and July 27, 1866, and such new weights and measures as shall be received from the United States as standard weights and measures in addition thereto or in renewal thereof, and such as shall be supplied by the State in conformity therewith and certified by the National Bureau of Standards shall be the State standards of weights and measures.

SEC. 2. In addition to the State standards of weights and measures, provided for above, there shall be supplied by the State at least one complete set of copies of these, to be kept at all times in the office of the State superintendent (commissioner), and to be known as office standards; and such other weights, measures, and apparatus as may be found necessary to carry out the provisions of this act, to be known as working standards. Such weights, measures, and apparatus shall be verified by the State superintendent (commissioner), or his deputy or inspectors, at his direction, upon their initial receipt and at least once in each year thereafter, the office standards by direct comparison with the State standards, the working standards by comparison with the office standards. When found accurate upon these tests the office and working standards shall be sealed by stamping on them the letter "—" and the last two figures of the year with seals which the State superintendent (commissioner) shall have and keep for that purpose. The office standards shall be used in making all comparisons of weights, measures, and weighing or measuring devices submitted for test in the office of the superintendent (commissioner) and the State standards shall be used only in verifying the office standards and for scientific purposes.

SEC. 3. There shall be a State superintendent (commissioner) of weights and measures, who shall be appointed by the governor, by and with the advice and consent of the senate. Such superintendent (commissioner) shall be appointed for a term of five years, and shall receive a salary of $———— a year. There shall be a deputy superintendent (commissioner) of weights and measures and inspectors of weights and measures, the deputy to be appointed by the superintendent of weights and measures and to hold office during the superintendent's (commissioner's) term of office, the inspectors to be appointed from an eligible list prepared by the civil-service board and under the rules of said board. The superintendent (commissioner) of weights and measures shall be allowed for salaries for the deputy superintendent (commissioner) of weights and measures, inspectors of weights and measures, clerical services, traveling and contingent expenses for himself, his deputy, and inspectors such sums as shall be appropriated by the legislature.

SEC. 4. The State superintendent (commissioner) of weights and measures shall forthwith, on his appointment, give a bond in the penal sum of $5,000, with sureties, to be approved by the secretary of state (attorney general) for the faithful performance of the duties of his office and for the safe-keeping of the standards intrusted to his care and for the surrender thereof immediately to his successor in office or to the person appointed by the governor to receive them. The deputy superintendent (commissioner) of weights and measures and each inspector of weights and measures shall forthwith upon his appointment give a bond in the penal sum of $1,000, with sureties, to be approved by the secretary of state (attorney general), for the faithful performance of the duties of his office and for the safe-keeping of any apparatus intrusted to his care.

SEC. 5. The superintendent (commissioner) of weights and measures shall take charge of the standards adopted by this act as the standards of the State, and cause them to be kept in a fireproof building belonging to the State (or in a safe and suitable place in the office of the superintendent (commissioner)), from which they shall not be removed except for repairs or for certification, and he shall take all other necessary precautions for their safe-keeping. He shall maintain the State standards in good order and shall submit them at least once in ten years to the National Bureau of Standards for certification.

He shall keep a complete record of the standards, balances, and other apparatus belonging to the State and take a receipt for same from his successor in office. He shall annually, on the first day of ————, make to the governor a report of all work done by his office.

SEC. 6. The superintendent (commissioner) of weights and measures, or his deputy, or inspectors, at his direction, shall at least once in five years try and prove by the office standards all standard weights, measures, and other apparatus which may belong to any county or city, required to appoint a sealer and purchase and keep standards of weights and measures by the provisions of this act, and shall seal such when found to be accurate by stamping on them the letter "—" and the last two figures of the year with seals which he shall have and keep for that purpose.

The State superintendent (commissioner), or his deputy, or inspectors, at his direction, shall inspect all standard weights, measures, and other apparatus used by such counties and cities at least once in two years, and shall keep a record of the same. He, or his deputy, or inspectors, at his direction, shall at least once in two years visit these cities and counties for the purpose and in order to inspect the work of the local sealers, and in the performance of such duties they may inspect the weights, measures, balances, or any other weighing or measuring devices of any citizen, firm, or corporation, and shall have the same powers as the local sealer of weights and measures. The superintendent shall issue from time to time regulations for the guidance of county and city sealers, and the said regulations shall govern the procedure to be followed by the aforesaid officers in the discharge of their duties.

SEC. 7. The State superintendent (commissioner) of weights and measures, shall have and keep a general supervision of the weights and measures, and weighing or measuring devices offered for sale, sold, or in use in the State. He, or his deputy, or inspectors, at his direction, shall, upon the written request of any citizen, firm, or corporation, or educational institution in the State test or calibrate weights, measures and weighing or measuring devices used as standards in the State. He, or his deputy, or inspectors, at his direction shall at least once annually test all scales, weights, and measures used in checking the receipts or disbursements of supplies in every institution for the maintenance of which moneys are appropriated by the legislature, and he shall report in writing his findings to the supervisory board and to the executive officer of the institution concerned, and, at the request of such board or executive officer, the superintendent (commissioner) of weights and measures shall appoint in writng one or more employees then in the actual service of the institution who shall act as special deputies for the purpose of checking the receipts or disbursements of supplies.

SEC. 8. When not otherwise provided by law the State superintendent (commissioner) shall have the power, and it shall be his duty in those parts of the State in which a city or county sealer is not required to be appointed by the provisions of this act, to inspect, test, try, and ascertain if they are correct all weights, measures, and weighing or measuring devices kept, offered, or exposed for sale, sold, or used or employed by any proprietor, agent, lessee, or employee in proving the size, quantity, extent, area, or measurement of quantities, things, produce, or articles for distribution or consumption purchased or offered or submitted by such person or persons for sale, hire, or award; and he shall have the power to and shall from time to time weigh or measure and inspect packages or amounts of commodities of whatsoever kind kept for the purpose of sale, offered or exposed for sale, or sold or in the process of delivery, in order to determine whether the same contain the amounts represented, and whether they be offered for sale or sold in a manner in accordance with law. He shall at least twice each year and as much oftener as he may deem necessary see that all weights, measures, and weighing or measuring devices used are correct. He may for the purpose above mentioned, and in the general performance of his official duties, enter and go into or upon, and without formal warrant, any stand, place, building, or premises, or stop any vendor, peddler, junk dealer, coal wagon, ice wagon, delivery wagon, or any person whatsoever, and require him, if necessary, to proceed to some place which the State superintendent (commissioner) may specify, for the purpose of making the proper tests. Whenever the State superintendent (commissioner) finds a violation of the statutes relating to weights and measures, he shall cause the violator to be prosecuted.

SEC. 9. Whenever the State superintendent (commissioner) compares weights, measures, or weighing or measuring instruments and finds that they corre-

spond or causes them to correspond with the standards in his possession, he shall seal or mark such weights, measures, or weighing or measuring instruments with appropriate devices.

SEC. 10. The State superintendent (commissioner) shall condemn and seize and may destroy incorrect weights, measures, or weighing or measuring devices which, in his best judgment, are not susceptible of satisfactory repair; but such as are incorrect and yet, in his best judgment, may be repaired, he shall mark or tag as "Condemned for repairs." The owner or users of any weights, measures, or weighing or measuring devices of which such disposition is made shall have the same repaired and corrected within ten days, and they may neither use nor dispose of the same in any way, but shall hold the same at the disposal of the superintendent (commissioner). Any weights, measures, or weighing or measuring devices which have been "condemned for repairs," and have not been repaired as required above, shall be confiscated by the superintendent (commissioner).

SEC. 11. The powers and duties given to and imposed upon the State superintendent (commissioner) of weights and measures by sections eight, nine, and ten are hereby given to and imposed upon his deputy and inspectors also, when acting under his instructions and at his direction.

SEC. 12. There shall be a county sealer of weights and measures in each county having a population of twenty thousand or more inhabitants, exclusive of any city having a population of twenty-five thousand or more inhabitants situated therein, according to the last official State or United States census, who shall be appointed by the board of county commissioners from a list to be furnished by the civil-service board and under the rules of such board where such board exists; otherwise he shall be appointed by the board of county commissioners for a term of five years. He shall be paid a salary determined by such board, said salary not to be less than $1,000 a year, and no fee shall be charged by him or by the county for the inspection, testing, or sealing or the repairing or adjusting of weights, measures, or weighing or measuring devices. Whenever the board of county commissioners of such a county shall deem it necessary, one or more deputy sealers of weights and measures may be appointed and their salaries fixed as above. All deputies appointed shall have the same powers and may perform the same duties as the county sealer, when acting under his instructions and at his direction.

SEC. 13. There shall be a city sealer of weights and measures in cities of not less than twenty-five thousand population, according to the latest official State or United States census, to be appointed by the mayor from a list to be furnished by the civil-service board and under the rules of such board where such board exists; otherwise he shall be appointed by the mayor, by and with the advice and consent of the common council, for a term of five years. He shall be paid a salary to be determined by the common council, said salary not to be less than $1,000 a year, and no fee shall be charged by him or by the city for the inspecting, testing, or sealing, or the repairing or adjusting of weights, measures, or weighing or measuring devices. Whenever the mayor and common council shall deem it necessary, one or more deputy sealers of weights and measures may be appointed and their salary fixed as above. All deputies appointed shall have the same powers and may perform the same duties as the city sealer, when acting under his instructions and at his direction. In those cities in which no sealer is required by the above, the county sealer of the county, if such an officer is required to be appointed by the provisions of this act, shall perform in said cities the duties and have like powers as in the county.

SEC. 14. Nothing in sections twelve and thirteen of this act shall be construed to prevent two or more counties or a county and a city situated therein, each of which are required to appoint sealers under the provisions of this act, from combining the whole or any part of their districts, as may be agreed upon by the boards of county commissioners of the counties, or such board of the county and the mayor and common council of the city, with one set of standards and one sealer, upon the written consent of the State superintendent (commissioner) of weights and measures. A sealer appointed in pursuance of an agreement for such combination shall, subject to the terms of his appointment, have the same authority, jurisdiction, and duties as if he had been appointed by each of the authorities who are parties to the agreement.

SEC. 15. The county or city sealer of weights and measures shall forthwith, on his appointment, give a bond in the penal sum of $1,000, with sureties, to be approved by the appointing power, for the faithful performance of the duties of his office.

SEC. 16. The board of county commissioners of each county and the common council of each city required to appoint a sealer under the provisions of this act shall procure at the expense of the county or city, and shall keep at all times a set of weights and measures and other apparatus as complete and of such materials and construction as the said superintendent (commissioner) of weights and measures may direct. All such weights, measures, and other apparatus having been tried and accurately proven by the State superintendent (commissioner), shall be sealed and certified to by him as hereinbefore provided, and shall be then deposited with and preserved by the county or city sealer as public standards for each county or city.

Whenever the board of county commissioners of such county or the common council of such city shall neglect for six months so to do, the county auditor of said county, or the city clerk (comptroller) of said city, on notification and request by the superintendent (commissioner) of weights and measures, shall provide such standards and cause the same to be tried, sealed, and deposited at the expense of the county or city.

SEC. 17. Where not otherwise provided by law, the county or city sealer shall have the same powers and shall perform the same duties within his county or city as are granted to and imposed upon the State superintendent (commissioner) of weights and measures by sections eight, nine, and ten of this act.

SER. 18. The county or city sealer shall keep a complete record of all of his official acts, and shall make an annual report, duly sworn to, on the first day of ———, to the State superintendent (commissioner) of weights and measures, on blanks furnished by the latter; and also, any special reports that the latter may request.

SEC. 19. The superintendent (commissioner) of weights and measures, his deputy, and inspectors, and the county and city sealers and deputy sealers of weights and measures, are hereby made special policemen and are authorized and empowered to arrest, without formal warrant, any violator of the statutes in relation to weights and measures, and to seize for use as evidence, without formal warrant, any false or unsealed weight, measure, or weighing or measuring device or package or amount of commodity found to be used, retained, or offered or exposed for sale or sold in violation of law.

SEC. 20. Any person who shall hinder or obstruct in any way the superintendent (commissioner) of weights and measures, his deputy, or inspectors, or any county or city sealer or deputy sealer of weights and measures in the performance of his official duties shall be guilty of a misdemeanor, and, upon conviction thereof in any court of competent jurisdiction, shall be punished by a fine of not less than $20 or more than $200, or by imprisonment in the county jail for not more than three months, or by both such fine and imprisonment.

SEC. 21. Any person who shall impersonate in any way the superintendent (commissioner) of weights and measures, his deputy, or inspectors, or any county or city sealer or deputy sealer of weights and measures, by the use of his seal or counterfeit of his seal, or otherwise, shall be guilty of a misdemeanor, and, upon conviction thereof in any court of competent jurisdiction, shall be punished by a fine of not less than $100 nor more than $500, or by imprisonment for not more than one year, or by both such fine and imprisonment.

SEC. 21a. It shall be unlawful to sell, except for immediate consumption on the premises, liquid commodities in any other manner than by weight or liquid measure, or commodities not liquid in any other manner than by measure of length, by weight, or by numerical count, unless otherwise agreed in writing by the mutual consent of the buyer and seller: *Provided, however*, That nothing in this section shall be construed to prevent the sale of fruits, vegetables, and other dry commodities in the standard barrel provided for in secton 28; or of berries and small fruits in boxes as provided for in section 29; or of vegetables or fruits usually sold by the head or bunch in this manner: *Provided further*, That nothing in this section shall be construed to apply to foodstuffs put up in original packages.

For the purposes of this section the term "original package" shall be construed to include a commodity in a package, carton, case, can, barrel, bottle, box, phial, or other receptacle, or in coverings or wrappings of any kind, put up by the manufacturer, which may be labeled, branded, or stenciled, or otherwise marked, or which may be suitable for labeling, branding, or stenciling, or marking otherwise, making one complete package of the commodity. The words "original package" shall be construed to include both the wholesale and the retail package.

For the purposes of this section the term "commodities not liquid" shall be construed to include goods, wares, and merchandise, which are not in liquid form and which have heretofore been sold by measure of length, by weight, by measures of capacity, or by numerical count, or which are susceptible of sale in any of these ways.

SEC. 22. It shall be unlawful to sell or offer to sell any coal, coke, or charcoal in any other manner than by weight. It shall be unlawful for any person to deliver any coal, coke, or charcoal without each such delivery being accompanied by a delivery ticket and a duplicate thereof, on each of which shall be in ink or other indelible substance, distinctly expressed in pounds, the gross weight of the load, the tare of the delivery vehicle, and the quantity or quantities of coal, coke, or charcoal contained in the vehicle used in such deliveries, with the name of the purchaser thereof, and the name of the dealer from whom purchased. One of these tickets shall be surrendered to the State superintendent (commissioner), his deputy, or inspectors, or a county or city sealer or deputy sealer of weights and measures, upon his demand for his inspection and this ticket or a weight slip issued by him when he desires to retain the original shall be delivered to the said purchaser of said coal, coke, or charcoal, or his agent or representative at the time of the delivery of the fuel; and the other ticket shall be retained by the seller of the fuel. When the buyer carries away the purchase, a delivery ticket showing the actual number of pounds delivered to him must be given to him at the time the sale is made.

SEC. 23. It shall be unlawful to keep for the purpose of sale, offer or expose for sale, or sell, any commodity in package form unless the net quantity of the contents be plainly and conspicuously marked on the outside of the package, in terms of weight, measure, or numerical count: *Provided, however*, That reasonable variations or tolerances shall be permitted, and that these reasonable variations or tolerances and also exemptions as to small packages shall be established by rules and regulations made by the superintendent (commissioner) of weights and measures: *And provided further*, That this section shall not be construed to apply to those commodities in package form, the manner of sale of which is specifically regulated by the provisions of other sections of this act.

The words "in package form" as used in this section shall be construed to include a commodity in a package, carton, case, can, box, barrel, bottle, phial, or other receptacle, or in coverings or wrappings of any kind, put up by the manufacturer, or, when put up prior to the order of the commodity, by the vendor, which may be labeled, branded, or stenciled, or otherwise marked, or which may be suitable for labeling, branding, or stenciling, or marking otherwise, making one complete package of the commodity. The words "in package form" shall be construed to include both the wholesale and the retail package.

SEC. 24. It shall be unlawful to keep for the purpose of sale, offer or expose for sale, or sell, any commodity composed in whole or in part of cotton, wool, linen, or silk, or any other textile material on a spool or similar holder, or in a container or band, or in a bolt or roll, or in a ball, coil, or skein, or in any similar manner, unless the net amount of the commodity in terms of weight or measure shall be definitely, plainly, and conspicuously marked on the principal label, if there be such a label; otherwise on a wrapping, band, or tag attached thereto.

The words "spool or similar holder, container or band, bolt or roll, or ball, coil, or skein" shall be construed to include the spool or similar holder, container or band, bolt or roll, or ball, coil, or skein put up by the manufacturer; or when put up prior to the order of the commodity, by the vendor. It shall be held to include both the wholesale and the retail package.

SEC. 25. It shall be unlawful for any person to sell, or offer to sell, any butter or renovated or process butter or oleomargarine in any other manner than by weight. It shall be unlawful for any person to put up, pack, or keep for the purpose of sale, offer or expose for sale or sell any butter or renovated or process butter, or oleomargarine in the form of prints, bricks, or rolls in any other than the following sizes, to wit, one-quarter pound, one-half pound, one pound, one and one-half pounds, or multiples of one pound. Each print, brick, or roll shall bear a definite, plain, and conspicuous statement of its true net weight, on the principal label, where there be such a label, otherwise on the outside wrapper thereof; such statement shall be in Gothic type not less than one-quarter inch square.

The prints, bricks, or rolls referred to in this section shall be construed to include those prints, bricks, or rolls put up by the manufacturer or producer; or when put up prior to the order of the commodity by the vendor.

SEC. 26. All bread kept for the purpose of sale, offered or exposed for sale, or sold, shall be sold by weight. To each loaf of bread shall be attached a label plainly showing its correct weight and the firm name of the manufacturer thereof, the size of the label and type to be used to be specified by the State superintendent (commissioner) of weights and measures. It shall be unlawful for any person to make or keep for the purpose of sale, offer or expose for sale, or sell, any bread other than such as shall be in accordance with the provisions of this section.

SEC. 27. Bottles used for the sale of milk or cream shall be of the capacity of one-half gallon, three pints, one quart, one pint, one-half pint, and one gill. Bottles or jars used for the sale of milk or cream shall have clearly blown or otherwise permanently marked in the side of the bottle the capacity of the bottle and the word "Sealed"; and in the side or bottom of the bottle the name, initials, or trade-mark of the manufacturer and a designating number, which designating number shall be different for each manufacturer and may be used in identifying the bottles. The designating number shall be furnished by the State superintendent (commissioner) of weights and measures upon application by the manufacturer, and upon the filing by the manufacturer of a bond in the sum of $1,000, with sureties to be approved by the secretary of state (attorney general) conditioned upon their conformance with the requirements of this section. A record of the bonds furnished and the designating numbers and to whom furnished shall be kept in the office of the superintendent (commissioner) of weights and measures.

Any manufacturer who sells or offers to sell milk or cream bottles to be used in this State that do not comply as to size and markings with the provisions of this section shall suffer a penalty of $500, to be recovered by the attorney general in an action against the offender's bondsmen to be brought in the name of the people of the State. Any dealer who uses, for the purpose of selling milk or cream, jars or bottles purchased after this law takes effect that do not comply with the requirements of this section as to markings and capacity shall be deemed guilty of using a false or insufficient measure.

Sealers of weights and measures are not required to seal bottles or jars for milk or cream marked as in this section provided, but they shall have the power to and shall from time to time make tests on individual bottles used by the various firms in the territory over which they have jurisdiction in order to ascertain if the above provisions are being complied with, and they shall immediately report violations found to the State superintendent (commissioner) of weights and measures.

SEC. 28. The standard barrel for fruits, vegetables, and other dry commodities other than cranberries shall be of the following dimensions when measured without distention of its parts: Length of staves, twenty-eight and one-half inches; diameter of heads, seventeen and one-eighth inches; distance between heads, twenty-six inches; circumference of bulge, sixty-four inches, outside measurement; and the thickness of staves not greater than four-tenths of an inch: *Provided*, That any barrel of a different form having a capacity of seven thousand and fifty-six cubic inches shall be a standard barrel. The standard barrel for cranberries shall be of the following dimensions when measured without distention of its parts: Length of staves, twenty-eight and one-half inches; diameter of heads, sixteen and one-fourth inches; distance between heads, twenty-five and one-fourth inches; circumference of bulge, fifty-eight and one-half inches, outside measurement; and the thickness of staves not greater than four-tenths of an inch.

It shall be unlawful for any person to offer or expose for sale, sell, or ship any other barrels for fruits, vegetables, or other dry commodities, or to offer or expose for sale, sell, or ship any fruits, vegetables, or other dry commodities in other barrels than the standard barrels as defined in this section, or subdivisions thereof known as the third, half, or three-quarters barrel: *Provided, however*, That nothing in this section shall apply to barrels used in packing or shipping commodities sold exclusively by weight or numerical count; *and provided further*, That no barrel shall be deemed below standard within the meaning of this section when shipped to any foreign country and constructed according to the specifications or directions of the foreign purchaser if not constructed in conflict with the laws of the foreign country to which the same is intended to be shipped.

SEC. 29. It shall be unlawful to sell or offer to sell any berries or small fruits in any other manner than by weight, or in the containers described in this section. It shall be unlawful to procure or keep for the purpose of sale, offer or expose for sale, sell, or give away baskets or other open containers for berries or small fruits, holding one quart or less, or to procure or keep for the purpose of sale, offer or expose for sale, or sell berries oo small fruits in baskets or other open containers, holding one quart or less, of any other than the following capacities, when level full: One quart, one pint, or one-half pint, standard dry measure.

SEC. 30. Whenever any commodity is sold on a basis of weight, it shall be unlaw to employ any other weight in such sale than the net weight of the commodity; and all contracts concerning goods sold on a basis of weight shall be understood and construed accordingly. Whenever the weight of a commodity is mentioned in this act, it shall be understood and construed to mean the net weight of the commodity.

SEC. 31. Any person who, by himself or by his servant or agent, or as the servant or agent of another person, shall offer or expose for sale, sell, use in the buying or selling of any commodity or thing or for hire or award, or retain in his possession a false weight or measure or weighing or measuring device or any weight, measure, or weighing or measuring device which has not been sealed by the State superintendent (commissioner), or his deputy, or inspectors, or by a sealer or deputy sealer of weights and measures within one year, or shall dispose of any condemned weight, measure, or weighing or measuring device contrary to law, or remove any tag placed thereon by the State superintendent (commissioner), or his deputy, or inspectors, or by a sealer or deputy sealer of weights and measures; or who shall sell or offer or expose for sale less than the quantity he represents, or shall take or attempt to take more than the quantity he represents, when, as the buyer, he furnishes the weight, measure, or weighing or measuring device by means of which the amount of commodity is determined; or who shall keep for the purpose of sale, offer or expose for sale, or sell any commodity in a manner contrary to law; or who shall violate any provision of this act for which a specific penalty has not been provided; or who shall sell or offer for sale, or use or have in his possession for the purpose of selling or using any device or instrument to be used to or calculated to falsify any weight or measure, shall be guilty of a misdemeanor, and shall be punished by a fine of not less than $20 or more than $200, or by imprisonment for not more than three months, or by both such fine and imprisonment, upon a first conviction in any court of competent jurisdiction; and upon a second or subsequent conviction in any court of competent jurisdiction he shall be punished by a fine of not less than $50 or more than $500, or by imprisonment in the county jail for not more than one year, or by both such fine and imprisonment.

SEC. 32. The word "person" as used in this act shall be construed to import both the plural and singular, as the case demands, and shall include corporations, companies societies, and associations.

The words "weights, measures, or (and) weighing or (and) measuring devices," as used in this act, shall be construed to include all weights, scales, beams, measures of every kind, instruments and mechanical devices for weighing or measuring, and any appliances and accessories connected with any or all such instruments.

The words "sell" or "sale" as used in this act, shall be construed to include barter and exchange.

TEXT, FORM NO. 3.

SECTION 1. The weights and measures received from the United States under joint resolutions of Congress approved June 14, 1836, and July 27, 1866, and such new weights and measures as shall be received from the United States as standard weights and measures in addition thereto or in renewal thereof, and such as shall be supplied by the State in conformity therewith and certified by the National Bureau of Standards, shall be the State standards of weights and measures.

SEC. 2. In addition to the State standards of weights and measures, provided for above, there shall be supplied by the State at least one complete set of copies of these, to be kept at all times in the office of the State superintendent (commissioner) and to be known as office standards; and such other weights, meas-

ures, and apparatus as may be found necessary to carry out the provisions of this act, to be known as working standards. Such weights, measures, and apparatus shall be verified by the State superintendent (commissioner) or his deputy, or inspectors, at his direction, upon their initial receipt and at least once in each year thereafter, the office standards by direct comparison with the State standards, the working standards by comparison with the office standards. When found accurate upon these tests the office and working standards shall be sealed by stamping on them the letter "—" and the last two figures of the year with seals which the State superintendent (commissioner) shall have and keep for that purpose. The office standards shall be used in making all comparisons of weights, measures, and weighing and measuring devices submitted for test in the office of the superintendent (commissioner) and the State standards shall be used only in verifying the office standards and for scientific purposes.

SEC. 3. There shall be a State superintendent (commissioner) of weights and measures, who shall be appointed by the governor, by and with the advice and consent of the senate. Such superintendent (commissioner) shall be appointed for a term of five years, and shall receive a salary of $——— a year. There shall be a deputy superintendent (commissioner) of weights and measures and inspectors of weights and measures, the deputy to be appointed by the superintendent (commissioner) of weights and measures and to hold office during the superintendent's (commissioner's) term of office; the inspectors to be appointed from an eligible list prepared by the civil-service board and under the rules of said board. The superintendent (commissioner) of weights and measures shall be allowed for salaries for the deputy superintendent (commissioner) of weights and measures, inspectors of weights and measures, clerical services, traveling and contingent expenses for himself, his deputy, and inspectors such sums as shall be appropriated by the legislature.

SEC. 4. The State superintendent (commissioner) of weights and measures shall forthwith, on his appointment, give a bond in the penal sum of $5,000, with sureties, to be approved by the secretary of state (attorney general) for the faithful performance of the duties of his office and for the safe-keeping of the standards intrusted to his care and for the surrender thereof immediately to his successor in office or to the person appointed by the governor to receive them. The deputy superintendent (commissioner) of weights and measures and each inspector of weights and measures shall forthwith upon his appointment give a bond in the penal sum of $1,000, with sureties, to be approved by the secretary of state (attorney general), for the faithful performance of the duties of his office and for the safe-keeping of any apparatus intrusted to his care.

SEC. 5. The superintendent (commissioner) of weights and measures shall take charge of the standards adopted by this act as standards of the State, and cause them to be kept in a fireproof building belonging to the State (or in a safe and suitable place in the office of the superintendent (commissioner)), from which they shall not be removed except for repairs or for certification, and he shall submit them at least once in ten years to the National Bureau of Standards for certification. He shall keep a complete record of the standards, balances, and other apparatus belonging to the State and take a receipt for the same from his successor in office. He shall annually, on the first day of ———, make to the governor a report of all work done by his office.

SEC. 6. The State superintendent (commissioner) of weights and measures, or his deputy, or inspectors, at his direction, shall at least once in five years try and prove by the office standards all standard weights, measures, and other apparatus which may belong to any county or city, and shall seal such when found to be accurate by stamping on them the letter "—" and the last two figures of the year with seals which he shall have and keep for that purpose.

The State superintendent (commissioner), or his deputy, or inspectors, at his direction, shall inspect all standard weights, measures, and other apparatus used by the counties and cities at least once in two years, and shall keep a record of the same. He, or his deputy, or inspectors, at his direction, shall at least once in two years visit the various cities and counties of the State for this purpose and in order to inspect the work of the local sealers, and in the performance of such duties they shall have the same powers as the local sealer of weights and measures. The superintendent (commissioner) shall issue from time to time regulations for the guidance of county and city sealers, and the said regulations shall govern the procedure to be followed by the aforesaid officers in the discharge of their duties.

SEC. 7. The State superintendent (commissioner) of weights and measures shall have and keep a general supervision of the weights, measures, and weighing or measuring devices offered for sale, sold, or in use in the State. He, or his deputy, or inspectors, at his direction, shall, upon the written request of any citizen, firm, corporation, or educational institution in the State, test or calibrate weights, measures, and weighing or measuring devices, used as standards in the State. He, or his deputy, or inspectors, at his direction, shall at least once annually test all scales, weights, and measures used in checking the receipt or disbursements of supplies in every institution for the maintenance of which moneys are appropriated by the legislature, and he shall report in writing his findings to the supervisory board and to the executive officer of the institution concerned, and, at the request of such board, or executive officer, the superintendent (commissioner) of weights and measures shall appoint in writing one or more employees then in the actual service of the institution who shall act as special deputies for the purpose of checking the receipts or disbursements of supplies.

SEC. 8. There shall be a county sealer of weights and measures in each county, who shall be appointed by the board of county commissioners from a list to be furnished by the civil-service board and under the rules of such board where such board exists; otherwise he shall be appointed by the board of county commissioners for a term of five years. He shall be paid a salary determined by such board, said salary not to be less than $1,000 a year, and no fee shall be charged by him or by the county for the inspecting, testing, or sealing, or the repairing or adjusting of weights, measures, or weighing or measuring devices. Whenever the board of county commissioners shall deem it necessary, one or more deputy sealers of weights and measures may be appointed and their salaries fixed as above. All deputies appointed shall have the same powers and may perform the same duties as the county sealer when acting under his instructions and at his direction.

SEC. 9. There shall be a city sealer of weights and measures in cities of not less than twenty-five thousand population, according to the latest official State or United States census, to be appointed by the mayor from a list to be furnished by the civil-service board and under the rules of such board where such board exists; otherwise he shall be appointed by the mayor, by and with the advise and consent of the common council, for a term of five years. He shall be paid a salary to be determined by the common council, said salary not to be less than $1,000 a year, and no fee shall be charged by him or by the city for the inspecting, testing or sealing, or repairing or adjusting of weights, measures, or weighing or measuring devices. Whenever the mayor and common council shall deem it necessary, one or more deputy sealers of weights and measures may be appointed and their salary fixed as above. All deputies appointed shall have the same powers and may perform the same duties as the city sealer when acting under his instructions and at his direction.

In those cities in which no sealer is required by the above the county sealer of the county shall perform in the said cities the duties and have like powers as in the county.

SEC. 10. Nothing in sections eight and nine of this act shall be construed to prevent two or more counties, or a county and a city situated therein, from combining the whole or any part of their districts, as may be agreed upon by the boards of county commissioners of the counties, or such board of the county and the mayor and common council of the city, with one set of standards and one sealer, upon the written consent of the State superintendent (commissioner) of weights and measures. A sealer appointed in pursuance of an agreement for such combination shall, subject to the terms of his appointment, have the same authority, jurisdiction, and duties as if he had been appointed by each of the authorities who are parties to the agreement.

SEC. 11. The county or city sealer of weights and measures shall forthwith, on his appointment, give a bond in the penal sum of $1,000, with sureties, to be approved by the appointing power, for the faithful performance of the duties of his office.

SEC. 12. The board of county commissioners of each county and the common council of each city required to appoiut a sealer under the provisions of this act shall procure at the expense of the county or city, and shall keep at all times a set of weights and measures and other apparatus, as complete and of such materials and construction as the State superintendent (commissioner) of weights and measures may direct. All such weights, measures, and other apparatus having been tried and accurately proven by the State superintendent

(commissioner) shall be sealed and certified to by him as hereinbefore provided, and shall be then deposited with and preserved by the county or city sealer as public standards for each county or city.

Whenever the board of county commissioners of a county or the common council of such city shall neglect for six months so to do, the county auditor of the county, or the city clerk (comptroller) of said city, on notification and request by the superintendent (commissioner) of weights and measures, shall provide such standards and cause the same to be tried, sealed, and deposited at the expense of the county or city.

SEC. 13. When not otherwise provided by law the county or city sealer shall have the power and it shall be his duty within his county or city to inspect, test, try, and ascertain if they are correct all weights, measures, and weighing or measuring devices kept, offered, or exposed for sale, sold, or used or employed within the county or city by any proprietor, agent, lessee, or employee in proving the size, quantity, extent, area, or measurement of quantities, things, produce, or articles for distribution or consumption purchased or offered or submitted by such person or persons for sale, hire, or award; and he shall have the power to and shall from time to time weigh or measure and inspect packages or amounts of commodities of whatsoever kind kept for the purpose of sale, offered or exposed for sale, or sold or in the process of delivery, in order to determine whether the same contain the amounts represented, and whether they be kept, offered or exposed for sale or sold in a manner in accordance with law; he shall at least twice each year and as much oftener as he may deem necessary see that all weights, measures, and weighing or measuring devices used in the county or city are correct. He may for the purpose above mentioned, and in the general performance of his official duties, enter and go into or upon, and without formal warrant, any stand, place, building, or premises, or stop any vendor, peddler, junk dealer, coal wagon, ice wagon, delivery wagon, or any person whomsoever, and require him, if necessary, to proceed to some place which the sealer may specify, for the purpose of making the proper tests. Whenever the county or city sealer finds a violation of the statutes relating to weights and measures, he shall cause the violator to be prosecuted.

SEC. 14. Whenever the county or city sealer compares weights, measures, or weighing or measuring devices and finds that they correspond or causes them to correspond with the standards in his possession, he shall seal or mark such weights, measures, or weighing or measuring devices with appropriate devices to be approved by the State superintendent (commissioner) of weights and measures.

SEC. 15. The county or city sealer shall condemn and seize and may destroy incorrect weights, measures, or weighing or measuring devices which, in his best judgment, are not susceptible of satisfactory repair; but such as are incorrect and yet, in his best judgment, may be repaired, he shall mark or tag as "Condemned for repairs" in a manner prescribed by the State superintendent (commissioner) of weights and measures. The owners or users of any weights, measures, or weighing or measuring devices of which such disposition is made shall have the same repaired and corrected within 10 days, and they may neither use nor dispose of the same in any way, but shall hold the same at the disposal of the sealer. Any weights, measures, or weighing or measuring devices which have been "condemned for repairs," and have not been repaired as required above, shall be confiscated by the sealer.

SEC. 16. The county or city sealer shall keep a complete record of all of his official acts, and shall make an annual report to the board of county commissioners of the county or the mayor and common council of the city, and an annual report, duly sworn to, on the 1st day of ———, to the State superintendent (commissioner) of weights and measures, on blanks to be furnished by the latter; and also any special reports that the latter may request.

SEC. 17. The superintendent (commissioner) of weights and measures, his deputy and inspectors, and the county and city sealers and deputy sealers of weights and measures, are hereby made special policemen, and are authorized and empowered to arrest, without formal warrant, any violator of the statutes in relation to weights and measures, and to seize for use as evidence, without formal warrant, any false or unsealed weight, measure, or weighing or measuring device or package or amount of commodity found to be used, retained, or offered or exposed for sale or sold in violation of law.

SEC. 18. Any person who shall hinder or obstruct in any way the superintendent (commissioner) of weights and measures, his deputy or inspectors, or

any county or city sealer or deputy sealer of weights and measures in the performance of his official duties shall be guilty of a misdemeanor, and upon conviction thereof in any court of competent jurisdiction shall be punished by a fine of not less than $20 or more than $200, or by imprisonment in the county jail for not more than three months, or by both such fine and imprisonment.

SEC. 19. Any person who shall impersonate in any way the superintendent (commissioner) of weights and measures, his deputy or inspectors, or any county or city sealer, or deputy sealer of weights and measures, by use of his seal or counterfeit of his seal, or otherwise, shall be guilty of a misdemeanor, and upon conviction thereof in any court of competent jurisdiction shall be punished by a fine of not less than $100 nor more than $500, or by imprisonment for not more than one year, or by both such fine and imprisonment.

SEC. 19a. It shall be unlawful to sell, except for immediate consumption on the premises, liquid commodities in any other manner than by weight or liquid measure, or commodities not liquid in any other manner than by measure of length, by weight, or by numerical count, unless otherwise agreed in writing by the mutual consent of the buyer and seller: *Provided, however*, That nothing in this section shall be construed to prevent the sale of fruits, vegetables, and other dry commodities in the standard barrel provided for in section 26; or of berries and small fruits in boxes as provided for in section 27; or of vegetables or fruits usually sold by the head or bunch, in this manner: *Provided further*, That nothing in this section shall be construed to apply to foodstuffs put up in original packages.

For the purposes of this section the term "original package" shall be construed to include a commodity in a package, carton, case, can, barrel, bottle, box, phial, or other receptacle, or in coverings or wrappings of any kind, put up by the manufacturer, which may be labeled, branded, or stenciled, or otherwise marked, or which may be suitable for labeling, branding, or stenciling, or marking otherwise, making one complete package of the commodity. The words "original package" shall be construed to include both the wholesale and the retail package.

For the purposes of this section the term "commodities not liquid" shall be construed to include goods, wares, and merchandise which are not in liquid form and which have heretofore been sold by measure of length, by weight, by measures of capacity, or by numerical count, or which are susceptible of sale in any of these ways.

SEC. 20. It shall be unlawful to sell or offer to sell any coal, coke, or charcoal in any other manner than by weight. It shall be unlawful for any person to deliver any coal, coke, or charcoal without such delivery being accompanied by a delivery ticket and a duplicate thereof, on each of which shall be in ink or other indelible substance, distinctly expressed in pounds, the gross weight of the load, the tare of the delivery vehicle, and the quantity or quantities of coal, coke, or charcoal contained in the vehicle used in such deliveries, with the name of the purchaser thereof, and the name of the dealer from whom purchased. One of these tickets shall be surrendered to the sealer or deputy sealer of weights and measures upon his demand for his inspection, and this ticket or a weight slip issued by him when he desires to retain the original shall be delivered to the said purchaser of said coal, coke, or charcoal, or his agent or representative at the time of the delivery of the fuel; and the other ticket shall be retained by the seller of the fuel. When the buyer carries away the purchase, a delivery ticket showing the actual number of pounds delivered to him must be given to him at the time the sale is made.

SEC. 21. It shall be unlawful to keep for the purpose of sale, offer or expose for sale, or sell any commodity in package form unless the net quantity of the contents be plainly and conspicuously marked on the outside of the package, in terms of weight, measure, or numerical count: *Provided, however*, That reasonable variations or tolerances shall be permitted, and that these reasonable variations or tolerances and also exemptions as to small packages shall be established by rules and regulations made by the superintendent (commissioner) of weights and measures: *And provided, further*, That this section shall not be construed to apply to those commodities in package form the manner of sale of which is specifically regulated by the provisions of other sections of this act.

The words "in package form" as used in this section shall be construed to include a commodity in a package, carton, case, can, box, barrel, bottle, phial, or other receptacle, or in coverings or wrappings of any kind, put up by the manufacturer, or, when put up prior to the order of the commodity, by the vendor, which may be labeled, branded, or stenciled, or otherwise marked, or which

may be suitable for labeling, branding, or stenciling, or marking otherwise, making one complete package of the commodity. The word "package" shall be construed to include both the wholesale and retail package.

SEC. 22. It shall be unlawful to keep for the purpose of sale, offer or expose for sale, or sell any commodity composed in whole or in part of cotton, wool, linen, or silk, or any other textile material on a spool or similar holder, or in a container or band, or in a bolt or roll, or in a ball, coil, or skein, or in any similar manner, unless the net amount of the commodity in terms of weight or measure shall be definitely, plainly, and conspicuously marked on the principal label, if there be such a label; otherwise on a wrapper, band, or tag attached thereto.

The words "spool or similar holder, container or band, bolt or roll, or ball, coil, or skein" shall be construed to include the spool or similar holder, container or band, bolt or roll, or ball, coil, or skein put up by the manufacturer; or, when put up prior to the order of the commodity, by the vendor. It shall be held to include both the wholesale and the retail package.

SEC. 23. It shall be unlawful for any person to sell or offer to sell any butter, or renovated or process butter, or oleomargarine in any other manner than by weight. It shall be unlawful for any person to put up, pack, or keep for the purpose of sale, offer or expose for sale, or sell any butter or renovated or process butter, or oleomargarine in the form of prints, bricks, or rolls in any other than the following sizes, to wit: One-quarter pound, one-half pound, one pound, one and one-half pounds, or multiples of one pound. Each print, brick, or roll shall bear a definite, plain, and conspicuous statement of its true net weight, on the principal label, where there be such label, otherwise on the outside wrapper thereof; such statement shall be in gothic type not less than one-quarter inch square.

The prints, bricks, or rolls referred to in this section shall be construed to include those prints, bricks, or rolls put up by the manufacturer or producer; or, when put up prior to the order of the commodity, by the vendor.

SEC. 24. All bread kept for the purpose of sale, offered or exposed for sale, or sold, shall be sold by weight. To each loaf of bread shall be attached a label plainly showing its correct weight and the firm name of the manufacturer thereof, the size of the label and type to be used to be specified by the State superintendent (commissioner) of weights and measures. It shall be unlawful for any person to make or keep for the purpose of sale, offer or expose for sale, or sell any bread other than such as shall be in accordance with the provisions of this section.

SEC. 25. Bottles used for the sale of milk or cream shall be of the capacity of one-half gallon, three pints, one quart, one pint, one-half pint, and one gill. Bottles or jars used for the sale of milk or cream shall have clearly blown or otherwise permanently marked in the side of the bottle the capacity of the bottle, and the word "Sealed"; and in the side or bottom of the bottle the name, initials, or trade-mark of the manufacturer and a designating number, which designating number shall be different for each manufacturer and may be used in identifying the bottles. The designating number shall be furnished by the State superintendent (commissioner) of weights and measures upon application by the manufacturer, and upon the filing by the manufacturer of a bond in the sum of $1,000 with sureties to be approved by the secretary of state (attorney general) conditioned upon their conformance with the requirements of this section. A record of the bonds furnished and the designating numbers and to whom furnished shall be kept in the office of the superintendent (commissioner) of weights and measures.

Any manufacturer who sells or offers to sell milk or cream bottles to be used in this State that do not comply as to size and markings with the provisions of this section shall suffer a penalty of $500, to be recovered by the attorney general in an action against the offender's bondsmen, to be brought in the name of the people of the State. Any dealer who uses, for the purpose of selling milk or cream, jars or bottles purchased after this law takes effect that do not comply with the requirements of this section as to markings and capacity shall be deemed guilty of using a false or insufficient measure.

Sealers of weights and measures are not required to seal bottles or jars for milk or cream marked as in this section provided, but they shall have the power to and shall from time to time make tests on individual bottles used by various firms in the territory over which they have jurisdiction in order to ascertain if the above provisions are being complied with, and they shall

immediately report violations found to the State superintendent (commissioner) of weights and measures.

SEC. 26. The standard barrel for fruits, vegetables, and other dry commodities other than cranberries shall be of the following dimensions when measured without distention of its parts: Length of staves, twenty-eight and one-half inches; diameter of heads, seventeen and one-eighth inches; distance between heads, twenty-six inches; circumference of bulge, sixty-four inches, outside measurement; and the thickness of staves not greater than four-tenths of an inch: *Provided*, That any barrel of a different form having a capacity of seven thousand and fifty-six cubic inches shall be a standard barrel. The standard barrel for cranberries shall be of the following dimensions when measured without distention of its parts: Length of staves, twenty-eight and one-half inches; diameter of heads, sixteen and one-fourth inches; distance between heads, twenty-five and one-fourth inches; circumference of bulge, fifty-eight and one-half inches, outside measurement; and the thickness of staves not greater than four-tenths of an inch.

It shall be unlawful for any person to offer or expose for sale, sell, or ship any other barrels for fruits, vegetables, or other dry commodities, or to offer or expose for sale, sell, or ship any fruits, vegetables, or other dry commodities in other barrels than the standard barrels as defined in this section, or subdivisions thereof known as the third, half, or three-quarters barrel; *Provided, however*, That nothing in this section shall apply to barrels used in packing or shipping commodities sold exclusively by weight or numerical count; *and provided further*, That no barrel shall be deemed below standard within the meaning of this section when shipped to any foreign country and constructed according to the specifications or directions of the foreign purchaser if not constructed in conflict with the laws of the foreign country to which the same is intended to be shipped.

SEC. 27. It shall be unlawful to sell or offer to sell any berries or small fruits in any other manner than by weight, or in the containers described in this section. It shall be unlawful to procure or keep for the purpose of sale, offer or expose for sale, sell, or give away baskets or other open containers for berries or small fruits, holding one quart or less, or to procure or keep for the purpose of sale, offer or expose for sale, or sell berries or small fruits in baskets or other open containers, holding one quart or less, of any other than the following capacities, when level full: One quart, one pint, or one-half pint, standard dry measure.

SEC. 28. Whenever any commodity is sold on a basis of weight, it shall be unlawful to employ any other weight in such sale than the net weight of the commodity; and all contracts concerning goods sold on a basis of weight shall be understood and construed accordingly. Whenever the weight of a commodity is mentioned in this act, it shall be understood and construed to mean the net weight of the commodity.

SEC. 29. Any person who, by himself or by his servant or agent, or as the servant or agent of another person, shall offer or expose for sale, sell, use in the buying or selling of any commodity or thing or for hire or award, or retain in his possession a false weight or measure or weighting or measuring device, or any weight or measure or weighing or measuring device which has not been sealed by the State superintendent (commissioner), or his deputy, or inspectors, or by a sealer or deputy sealer of weights and measures within one year: or shall dispose of any condemned weight, measure, or weighing or measuring device contrary to law, or remove any tag placed thereon by the State superintendent (commissioner), or his deputy, or inspectors, or by a sealer or deputy sealer of weights and measures; or who shall sell or offer or expose for sale less than the quantity he represents, or shall take or attempt to take more than the quantity he represents, when as the buyer, he furnishes the weight, measure, or weighing or measuring device by means of which the amount of commodity is determined, or who shall keep for the purpose of sale, offer or expose for sale, or sell any commodity in a manner contrary to law; or who shall violate any provision of this act for which a specific penalty has not been provided; or who shall sell or offer for sale, or use or have in his possession for the purpose of selling or using any device or instrument to be used to, or calculated to, falsify any weight or measure, shall be guilty of a misdemeanor, and shall be punished by a fine of not less than $20 or more than $200, or by imprisonment for not more than three months, or by both such fine and imprisonment, upon a first conviction in any court of competent jurisdiction; and upon a

second or subsequent conviction in any court of competent jurisdiction, he shall be punished by a fine or not less than $50 or more than $500, or by imprisonment in the county jail for not more than one year, or by both such fine and imprisonment.

SEC. 30. The word "person" as used in this act, shall be construed to import both singular and plural, as the case demands, and shall include corporations, companies, societies, and associations.

The words "weights, measures, or (and) weighing or (and) measuring devices" as used in this act, shall be construed to include all weights, scales, beams, measures of every kind, instruments and mechanical devices for weighing or measuring, and any appliances and accessories connected with any or all such instruments.

The words "sell" or "sale" as used in this act, shall be construed to include barter and exchange.

○